NO. 77 NOTES FROM THE SHOP $3.95

Woodsmith®

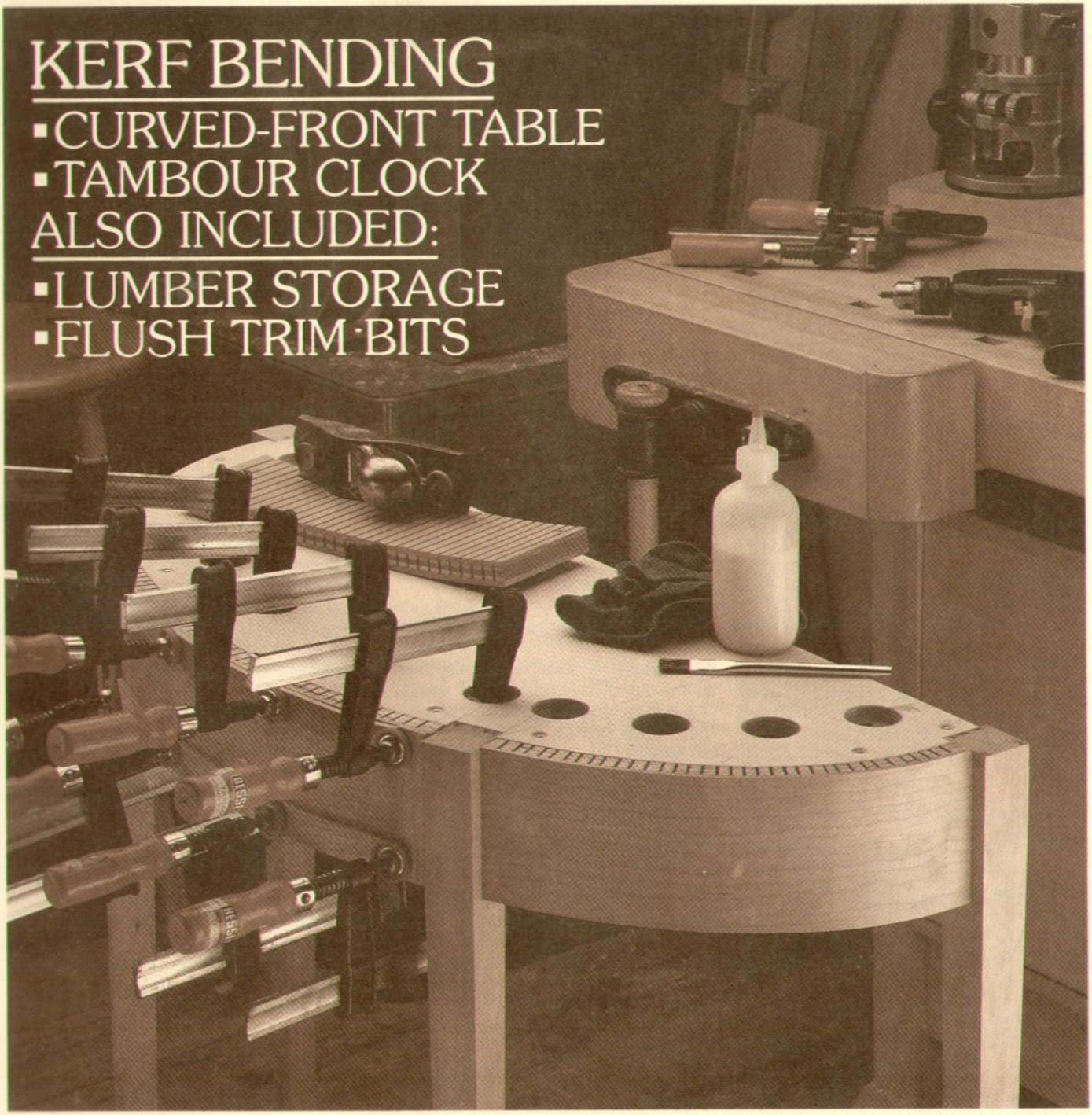

KERF BENDING

- CURVED-FRONT TABLE
- TAMBOUR CLOCK

ALSO INCLUDED:

- LUMBER STORAGE
- FLUSH TRIM BITS

No. 77 October, 1991

Woodsmith®

Editor Donald B. Peschke
Design Director Ted Kralicek
Managing Editor Douglas L. Hicks
Associate Editor Terry J. Strohman
Assistant Editors James M. Dolan, Richard S. Peters, Gordon Gaippe
Project Designer Ken Munkel
Assistant Art Director Rod Stoakes
Illustrators David Kreyling, Cary Christensen, Chris Glowacki, Dirk Ver Steeg, Kurt Schultz
Shop Manager Steve Curtis
Circulation Director Liz Bredeson
Subscription Manager Sandy Baum
Circulation Analyst Jim Woodson
Newsstand Sales Kent A. Buckton

WOODSMITH SOURCEBOOK
Marketing Director Robert Murry
Graphics Director Jon Snyder
Project Supplies Leslie Ann Gearhart, Linda Jones
Warehouse Jerry Carson, Supv., Gloria Sheehan, Ronald Long, David Stout
Customer Service Mgr. Linda Morrow
Customer Service Jennie Enos, Genelle Branson, Mic Smith, Roberta Rush, Joy Johnson, Lori Seibert, Tammi Juhl
Sourcebook Advertising Jean Myers

CORPORATE SERVICES
Controller Paul E. Gray
Bookkeeping Linda O'Rourke
Network Administrator Douglas M. Lidster
Administrative Asst. Cheryl A. Scott
Building Maintenance Ken Griffith, Archie Krause

STORE MANAGERS
Des Moines, IA Kent Welsh
Berkeley, CA Michael DeHaven

Woodsmith® (ISSN 0164-4114) is published bimonthly (Feb., April, June, Aug., Oct., Dec.) by Woodsmith Publishing Company, 2200 Grand Ave., Des Moines, IA 50312. Printed in U.S.A.
Woodsmith® is a registered trademark of Woodsmith Publishing Company.
©Copyright 1991 by Woodsmith Publishing Company. All rights reserved.
Subscriptions: Single copy: $3.95. One year subscription (6 issues), $17.95. Two years (12 issues), $31.95. (Canada/Foreign $21.95 per year, U.S. funds.)
Second Class Postage Paid at Des Moines, IA and at additional offices.
Postmaster: Send change of address to *Woodsmith*, Box 10718, Des Moines, IA 50350.
Subscription Questions? Call 1-800-333-5075, 8:00 am to 5:00 pm, Central Time, weekdays.

EDITOR'S COLUMN

Sawdust

Building furniture in a production (professional) shop usually involves very different methods and techniques than used in a home shop. The biggest factor is repetition. Production shops employ a lot of jigs, set-ups, and templates because they're doing the same task over and over to produce multiple pieces of furniture.

But some of those methods can be very useful in building a single piece of furniture in a home shop. For example, both of the projects in this issue require cutting curved shapes. It would be easy to draw the curve directly on the plywood, cut it to rough shape, and sand it to final smoothness.

But we decided to use a production shop method of making a template to cut out the shape. Granted, you have to spend a lot of time making a template, when you could have spent that time on the finished piece.

But there are two advantages to making templates. First, if you make a mistake, it will be on the template rather than on expensive hardwood or plywood. Second, you can see and alter the shape of the template before committing to the final shape. This is particularly useful in a design/build situation, where you're designing as you go.

We took this template method one step further. In a home shop, you might make the template to use only as a pattern. That is, after the template is made, it's only used to trace the outline of the shape. Then you rough cut and sand down to the line.

Instead, we used the template as a guide to actually cut the piece to final shape. This is done with a router and a flush trim bit. The pilot bearing on the bit follows the edge of the template to cut a perfect duplicate of the shape. Since you've spent all the time to get the template perfect, you might as well take advantage of it.

WOODSMITH SOURCEBOOK

With this issue, we're introducing a new and expanded version of the catalog we send out with each issue. And it has a new name: the *Woodsmith Sourcebook*.

Long-time readers will probably recognize the *Sourcebook* name. For the past several years we have published an annual version of the *Sourcebook*. It contained listings of woodworking catalogs and tools, and it also carried advertising.

It was our solution to a dilemma — no one wanted advertising in *Woodsmith*. But almost everyone wanted the information that advertising can supply.

At the same time, for the past two years we've been experimenting with the format of the *Woodsmith* catalog that is sent out with each issue.

After a little brainstorming, we came up with a solution we all liked . . . combine the current catalog with the old version of the *Sourcebook*, and make it even better.

The idea is to make the new *Woodsmith Sourcebook* a universal source of information for woodworkers.

It has expanded listings for the project supplies and tools needed to build *Woodsmith* projects. And it has photos and descriptions of the projects in the past issues, just like the old catalog.

Then we added two more sections. There's a Directory Listing of all the companies that make just about everything woodworkers need. This Listing will continue to grow so you'll have easy access to suppliers if you're looking for something.

We've already planned to expand the Listing section by adding an index to the articles and projects that have appeared in all the past issues of *Woodsmith*.

And there's one more addition to the new *Sourcebook*. The Showcase section makes it easy to order woodworking catalogs, and information about tools and supplies. (There's even a special order form for ordering the items in the Showcase section. It's attached next to the catalog order form. Look on the back of the sheet that has your label on it.)

We all hope you like this new version of the *Woodsmith Sourcebook*.

NEW FACES. Jim Woodson has joined our staff as a circulation analyst. Jim is one of the few graduates in the country with an M.B.A. in direct marketing. That provides him with a strong background in the statistical analysis needed for magazine circulation.

ANOTHER NEW FACE. Also joining us is Tammi Juhl. You might hear her cheerful voice if you call to order something from the *Woodsmith Sourcebook*.

NEXT ISSUE. The next issue of *Woodsmith* will be mailed during the last week in November.

Don

A LOOK INSIDE

Contents

Tips & Techniques 4 *Six tips from fellow woodworkers: 1) Jig for Cutting Thin Strips. 2) Right Hand Router Rules. 3) Pipe Clamp Extender. 4) Table Top for Roller Stand. 5) See-Thru Clamping Block. 6) Starting Screws in Tight Places.*

Tambour Clock 6 *The curved top of this traditional Tambour Clock was made by gluing veneer over kerf-bent Masonite. A timely technique for a timeless design.*

Kerf Bending 12 *The key to successful kerf bending is the spacing between the kerfs and cutting the kerfs to the right depth. Use this technique to create classic designs.*

Shop Notes 16 *1) Drawing a Partial Ellipse. 2) Resawing Face Veneer from Plywood. 3) Routing with a Pilot Strip. 4) Rabbeting without Chipout.*

Curved-Front Table 18 *We made the "inlaid" legs on this table without doing any inlay. And the curved aprons are kerf-bent plywood. A classic project, but modern techniques.*

Talking Shop 26 *1) Positioning a Guide Block to Resaw on the Band Saw. 2) Storing Small Amounts of Lumber. 3) Using Slow-Setting Glue. 4) Table Saw — Working on the Left Side or Right Side of the Blade?*

Wood Storage 28 *Winners of the wood storage contest. A two-part system for storing lumber and plywood. A fold-down plywood wall rack. Using bungee cords — and also spring poles — to keep your lumber neatly and securely in place.*

Flush Trim Bits 30 *Two flush trim router bits. With the pilot bearing on the top or the bottom, routing a pattern is fast and accurate.*

Sources 31 *Hardware and project supplies needed for the projects in this issue.*

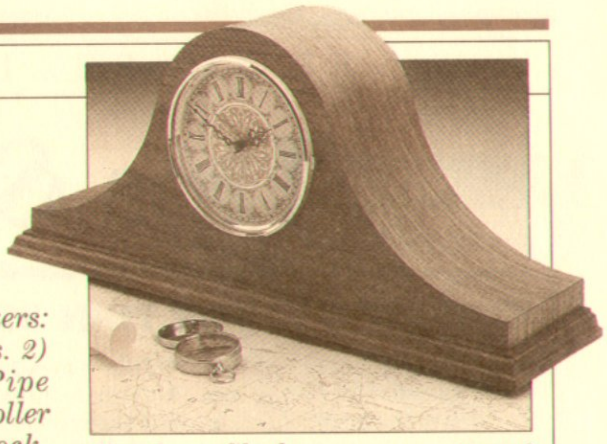

Tambour Clock *page 6*

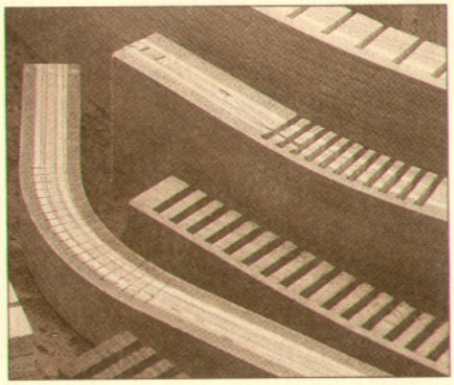

Kerf Bending *page 12*

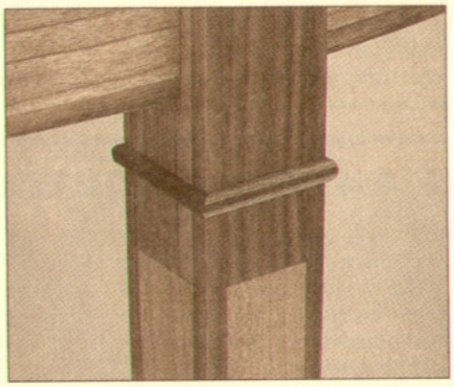

Curved-Front Table *page 18*

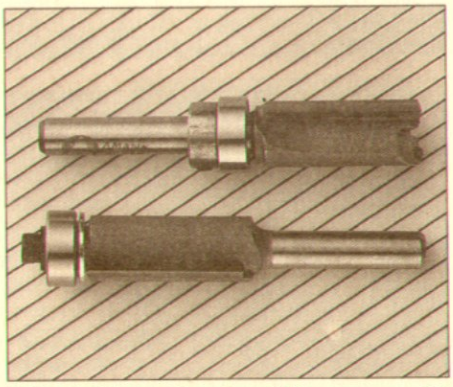

Flush Trim Router Bits *page 30*

Tips & Techniques

CUTTING JIG FOR THIN STRIPS

■ In *Woodsmith* No. 74, you show a method of cutting thin strips on the table saw where the strip is cut between the blade and the fence. But I prefer to rip thin strips using a simple jig that's between the blade and fence, see Fig. 1. The jig supports the strip as it's being cut. And it has an adjustable stop that pushes the strip past the blade.

To make this jig, first cut a piece of ¾" plywood 6" wide and 24" long. Next, so the jig can be used to cut strips of different thicknesses, I added an adjustable stop. To do this, cut a piece of ¾"-thick hardwood 1" wide and 6" long, see Fig. 1a.

To make the stop adjustable, cut a ¼"-wide and ¾"-long slot centered on one edge of the stop for a screw, see Fig. 1. Then, drill a pilot hole in the back edge of the jig, and attach the stop with a sheet metal screw and washer.

Finally, to make the jig easier to use, mount a handle on the top just ahead of the stop. I cut the handle from a piece of 2x4 on the band saw, and screwed it to the plywood base.

To use the jig, start by adjusting the stop so it projects out from the side of the jig the same distance as the desired thickness of the strip. Next, to position the table saw fence, first set the jig between the blade and the rip fence with the stop touching the side of the teeth. Then slide the fence over and lock it when it touches the jig, see Fig. 1a.

To rip a thin strip, place the stock to be cut against the jig with one corner in front of the stop. Then push both the jig and the stock through the blade.

Don McCollor
Spring Boro, Ohio

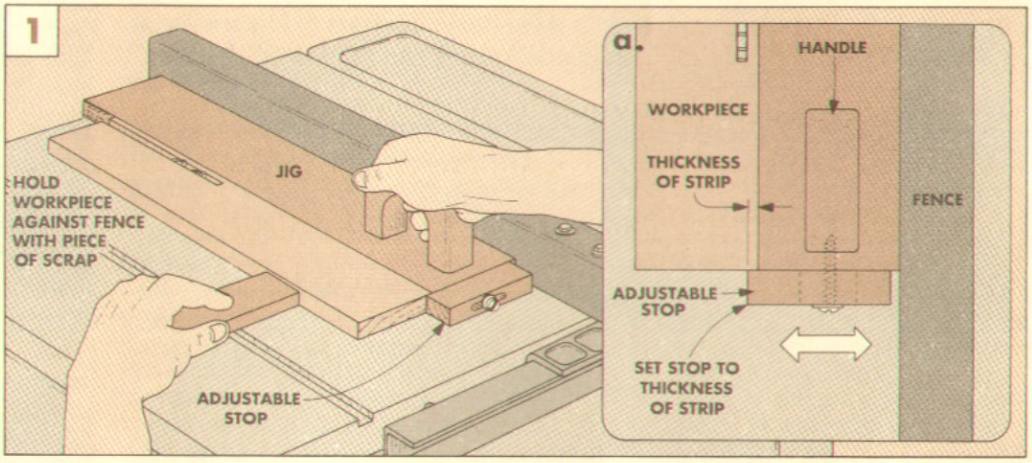

RIGHT HAND ROUTER RULES

■ Trying to figure out which direction to move my router along the edge of a workpiece is often confusing. So I came up with this simple way to help remember which direction to rout. All I use are the thumb and index finger on my *right* hand.

For instance, when routing the edge of a workpiece with a hand-held router, it's best to feed the router from left to right. This way, the bit cuts cleanly into the wood and doesn't bounce along the edge. To help remember this, I hold my right hand with the knuckles up along the edge to be routed. Then I extend my index finger parallel to the edge and curl my thumb, see Fig. 1.

In this situation, my thumb indicates the direction the router bit is turning. And my index finger points in the direction to move the router along the edge of the workpiece.

The rule is slightly different when using a fence to guide the router, such as when you're cutting a dado. In this case, you want the rotation of the bit to pull the router against the fence.

To figure out where to position the fence in relation to the router, extend your thumb to create a 90° angle with your index finger, see Fig. 2.

In this case, if my hand were the router, my thumb should be against the fence. And my index finger indicates the direction to move the router along the fence.

Rodney C. Hayward
New South Wales, Australia

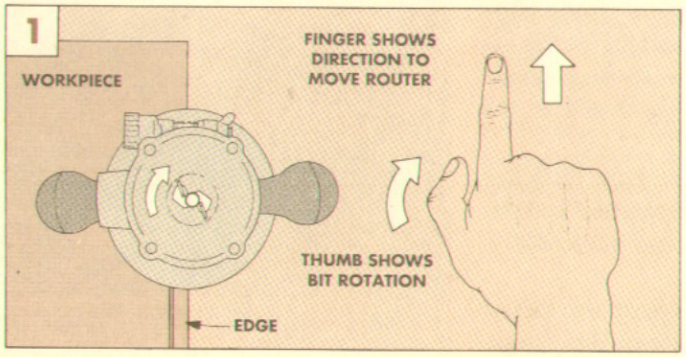

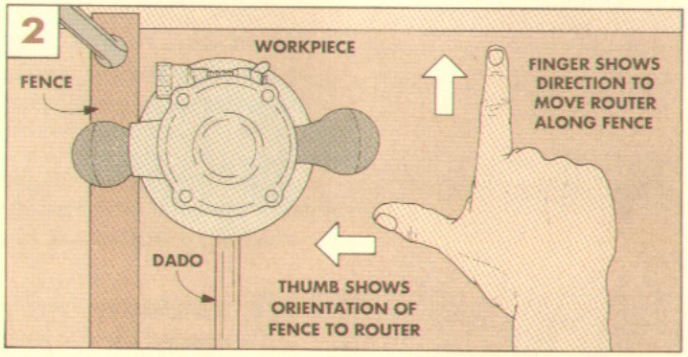

CLAMP EXTENDER

■ I don't have many long pipe clamps. So when I need an extra one, I use a short clamp and a T-shaped clamp extender that hooks on to the end of a clamp to extend its reach, see Fig. 1.

To make the extender, cut a strip of wood about 2" wide. At one end cut a ½"-deep dado across the strip (see drawing). At the other end of the strip, drill a series of ¼"-diameter holes, 1" apart. Then cut a short cross-piece and bolt it to the long piece to form a "T".

To use the extender, hook the "T"-end on one side of the stock to be clamped. Then hook the clamp in the dado in the extender. As the clamp is tightened, use the minimum pressure required to draw the pieces together. Too much pressure may cause the clamped pieces to bow.

Cornell N. Bogdan, Sr.
Westfield, Massachusetts

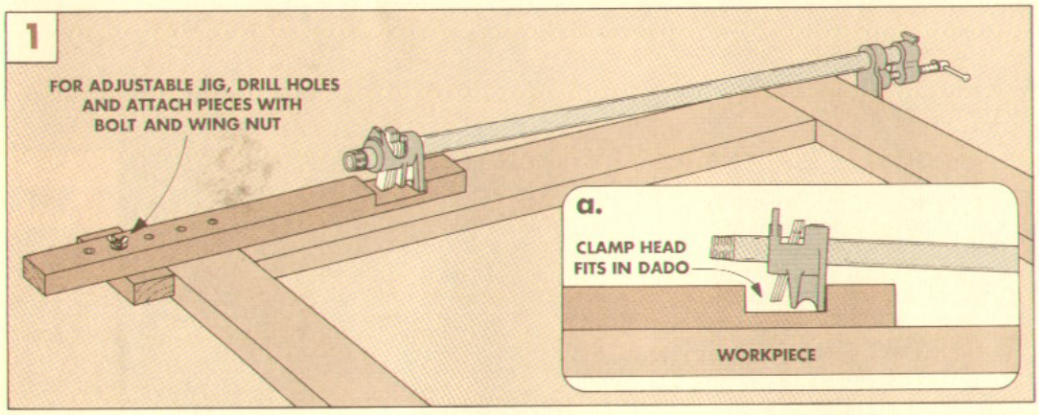

QUICK TIP

SCREW HELPER

■ Trying to drive a screw in a tight place can be a real challenge — especially when it comes to getting the screw started. Just when I get the screwdriver aligned in the screw slot and start to drive it, the screw slips loose.

So I figured out a way to make the job a little easier by putting a little hot candle wax on the threaded point of the screw.

Just dip the point of the screw into a pool of hot candle wax. When the screw is lifted out, the wax will start to cool. Before it hardens, twist the screw into the pilot hole with your fingers.

If you haven't drilled a pilot hole, push the point into the wood and twist it to get it started. Then you can let go. The wax on the point of the screw will hold it in place temporarily until you screw it in.

Jay Saunders
Pella, Iowa

TABLE TOP FOR ROLLER STAND

■ I made the wide Roller Stand in *Woodsmith* No. 70. But since I don't use it every day, I made a cover for the rollers that converts the stand into a table, see Fig. 1. *(Editor's note: The same idea could be used to cover a table saw or router table.)*

To make the cover, cut a piece of plywood large enough to fit over the rollers and the roller rails (mine is 24" x 32"). Then cut two ¾"-square strips of wood as spacers to fit under the plywood. (This way, the plywood top rests on the Roller Stand's *rails*, not on the rollers, see Fig. 1a.)

To keep the top firmly in place, install two short pins (¼" dowels) in each of the spacers. Then drill holes in the rails of the Roller Stand for the pins.

Albert D. Wood
Grantham, New Hampshire

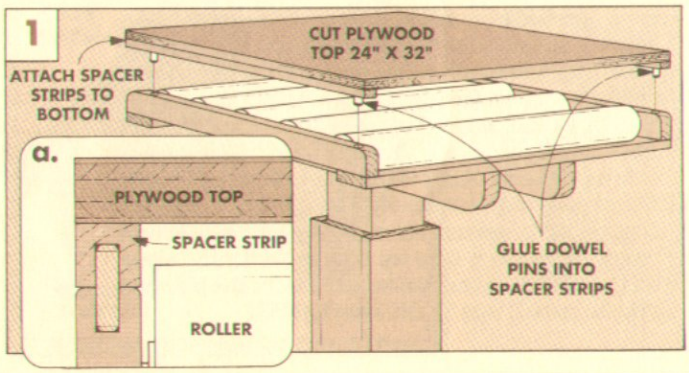

SEE-THRU CLAMPING BLOCK

■ When gluing strips of inlay, such as mitered corners, I want to see under the clamps to make sure the strips don't shift as I tighten the clamps. So I use a piece of clear ¼" Plexiglas as a clamping block, see Fig. 1.

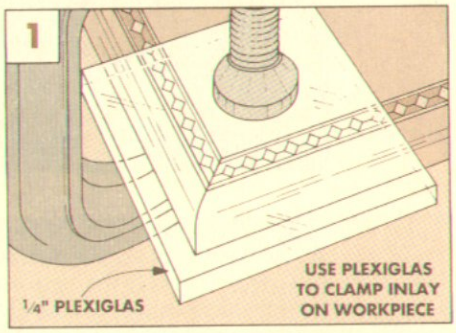

To do this, I place the inlay strip in position on the workpiece and press it into the glue. Then place a piece of Plexiglas over it and clamp it to the workpiece. Once the clamps are tight, I check to be sure the inlay hasn't moved.

Note: This technique also works well when doing marquetry and patching veneer. I haven't had problems with the glue sticking to the Plexiglas.

Francis Pfrank
Schaumburg, Illinois

SEND IN YOUR TIPS

If you would like to share a tip or idea, just send it to *Woodsmith*, Tips and Techniques, 2200 Grand Ave., Des Moines, Iowa 50312.

We will pay (upon publication) $15 to $100, depending on the published length of the tip. Please include an explanation and a photo or sketch (we'll draw a new one).

Tambour Clock

The double curve gives this clock a classic, graceful shape. Building it involves a couple of techniques you may not have used before – kerf bending and routing shapes with a template.

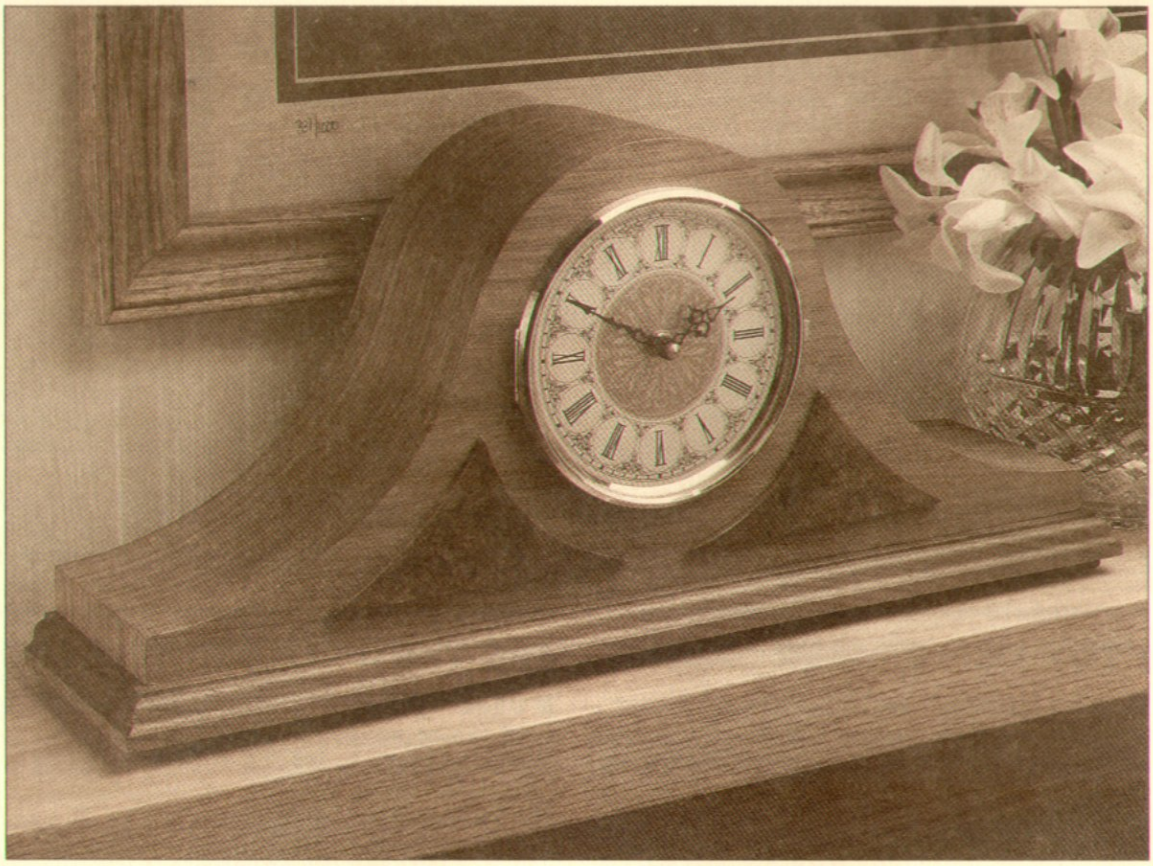

At first glance this Tambour Clock appears to be made from a solid block of walnut. But up close you notice that only the base is solid wood. When you open the door on the back and look inside, you see that the front and back of the case are plywood. And the top *looks* like plywood, but on the inside it's Masonite.

Why all the different materials to make a clock that looks like a solid piece of wood? Couldn't you just make it out of a solid block?

You could, and it would probably be a more straightforward way to make the clock. But an arch-topped case made from solid wood just wouldn't be as attractive, mostly because there'd be a lot of end grain exposed. End grain mixed with face grain looks like Morse code — a series of lines interrupted by a bunch of dots.

TECHNIQUES. Making the clock mostly from plywood presents several challenges. First, ¾" plywood doesn't bend around the double-curve very easily. Instead, I kerf bent a piece of ¼" Masonite for the top, then covered this with a piece of veneer resawn from plywood. (Both techniques are covered in this issue.)

Another challenge with this clock was cutting the curved plywood front and back pieces to identical shape. There's a simple trick for this. It involves cutting the parts to rough shape first, then routing them with the use of a template and a flush trim bit, (see page 30).

CLOCK WORKS & KIT. Before building the clock, it's best to have the clock movement in hand. There are two clock movements that can be used. One is a quartz (battery-powered) movement. The other is a keywind (mechanical) brass movement with gong. *Woodsmith Project Supplies* is offering both movements, along with the clock face and hands, and kits for the plywood and solid pieces, (see Sources on page 31).

MATERIALS

A	Case Front (1)	3/4 x 7 5/16 x 17 1/4
B	Case Back (1)	3/4 x 7 5/16 x 17 1/4
C	Filler Blocks (2)	1/2 x 2 1/2 x 4
D	Case Top (1)	1/4 x 3 1/4 x 24 (Rgh)
E	End Veneer (2)	4 1/4 x 3/4 (Rgh)
F	Top Veneer (1)	4 1/4 x 24 (Rgh)
G	Base (1)	3/4 x 4 1/2 x 18 1/4
H	Feet (2)	1/4 x 1 1/4 x 4 1/4
I	Door (1)	3/4 x 6 1/2 x 5

SUPPLIES

- 3/4" Wire brads (50)
- #6 x 1 1/2" Fh Woodscrews (8)
- 1" x 1" Brass hinges (2)
- Brass door pull
- Bullet catch
- #4 x 1/2" Rh Woodscrew
- Clock movement
- Clock face, hands and bezel
- General Finishes' Sealacell Sealer
- General Finishes' Royal Finish (Satin)

THE TEMPLATE

A 1/4"-thick template is used to shape the front and back of the clock, see Template Diagram below. Since the case front and back are the same size, you can use this template to cut both pieces. The only difference is the opening in the case back.

To make the template, begin with a piece of thin plywood or Masonite 7 3/8" wide and 17 1/4" long. Use a compass to draw the arcs as shown. To complete the template, cut on the waste side of the line for the arched top and for the door opening. Then sand or file the arcs smooth.

Now, to use the template, lay it on the plywood workpiece and draw a line around the edge of the template, see drawing below. After this, rough-cut outside the line. Then attach the template to the blank and rout around the edge with a flush trim bit in the router, refer to page 8.

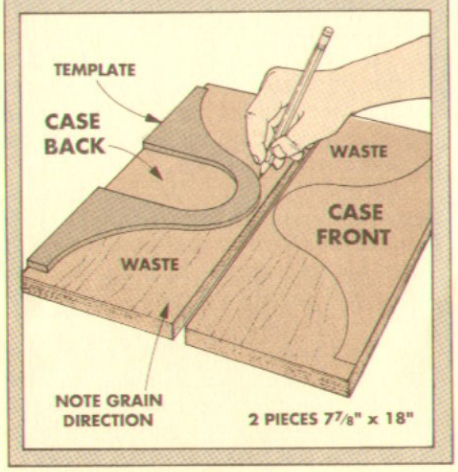

EXPLODED VIEW

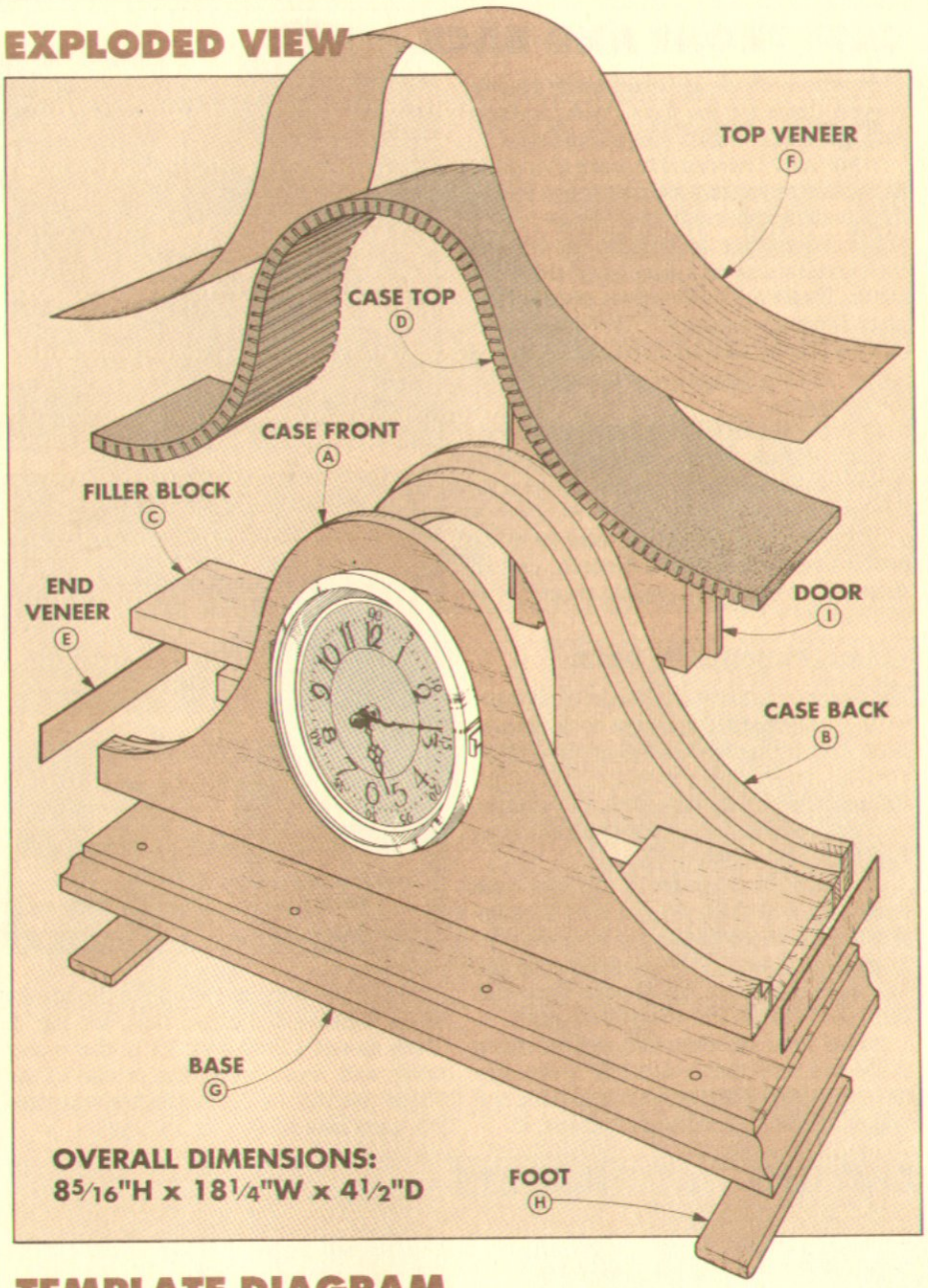

TEMPLATE DIAGRAM

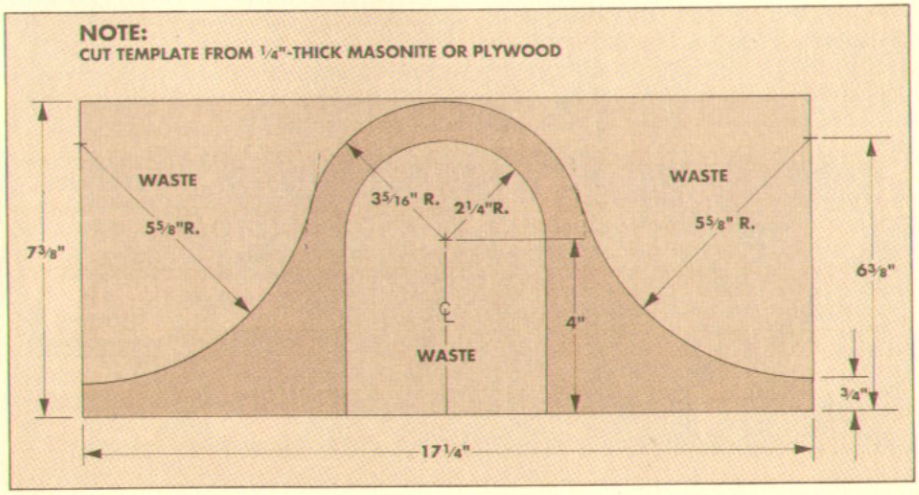

CASE FRONT AND BACK

This whole clock is based on a double-curved shape for the front, back, and top. And that shape begins with a template.

TEMPLATE. The idea is to make a template as a guide so you can use a router to cut the front and back pieces to exact shape.

I began making the template by drawing the curved shape on a piece of ¼"-thick Masonite. (Refer to The Template and the Template Diagram on page 7. The diagram includes the outline of the double-curved shape, and also the shape of the opening for the back door.)

After the outline is drawn, cut the template to shape slightly oversize with a sabre saw or band saw. Also rough-cut out the opening for the back door.

Now, very carefully file or sand up to the pencil lines to produce a smooth, curved shape. (You want the template as perfect as you can get it.)

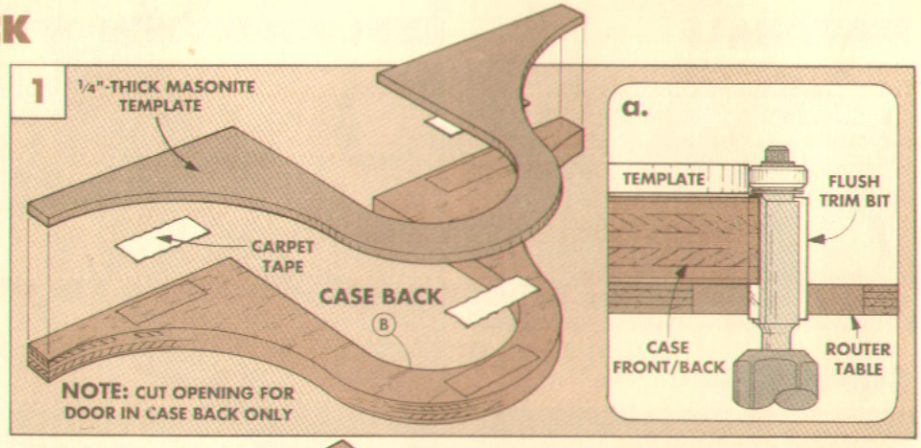

FRONT AND BACK

The next step is to cut two blanks of plywood for the case front (A) and case back (B), see page 7. Also cut one piece of plywood (4½" x 25½") for the top and end veneer strips. (More on these strips later.) Note: To get the best color match, cut all three blanks from the same piece of plywood.

To make the **case front (A)** and **case back (B)**, first draw the shape of the template onto both plywood blanks (again, refer to drawing on page 7). Then cut the front and back to rough shape, ⅛" outside the pencil line. *Don't* cut out the door opening yet.

FLUSH TRIM SMOOTH. Rather than trying to file and sand these pieces to shape, you can use the template with a router table and a flush trim bit to get the exact shape.

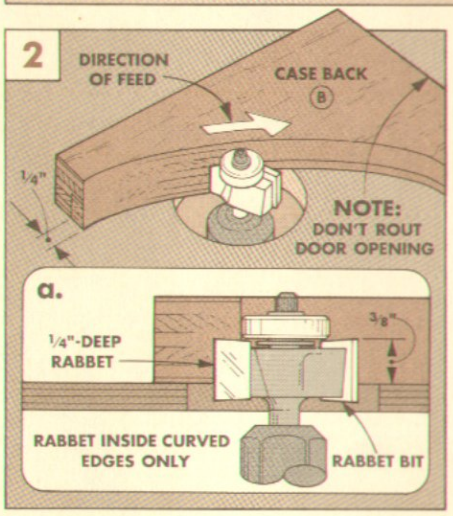

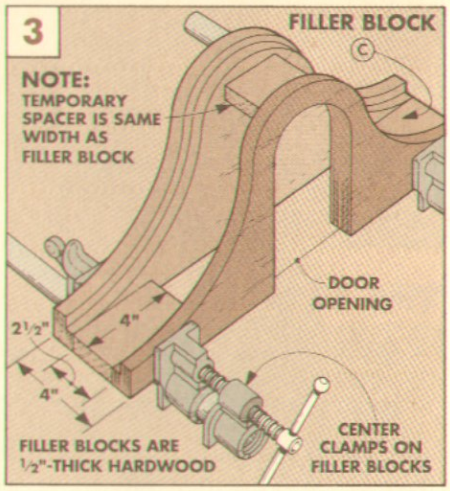

Attach the template to one of the blanks using double-sided carpet tape, see Fig. 1. Then mount a flush trim bit in the router table, and rout around the profile of the shape, see Fig. 1a. Do this on both the case front and case back.

DOOR OPENING. On the piece for the back, also rough cut the opening for the door, see Fig. 1. Then use the template and flush trim bit again to smooth the opening to shape.

RABBET EDGES. The next step is to provide a way to mount the case top. (The case top is a piece of ¼"-thick Masonite that's covered with veneer.)

I used a rabbeting bit on the router table to cut a ¼"-deep rabbet along the curved edge of each piece, see Fig. 3. The only problem with this procedure is that most rabbeting bits cut a ⅜"-deep rabbet, not ¼".

You can buy a special rabbet bit that has a pilot bearing sized to cut a ¼"-deep rabbet, see Fig. 2a. Or, you can replace the pilot bearing on regular rabbet bit with a larger bearing, (see Sources, page 31). Or, you can use a standard ⅜" bit and bearing with the jig shown in the box at left.

CASE ENDS. After rabbeting the edges, the next step is to cut two **filler blocks (C)** to fit between the case front and back, see Fig. 3. These blocks hold the front and back together, and provide a surface to mount the veneer on the end of the case.

ASSEMBLE CASE. Now the case front and back can be assembled as a unit, with the filler blocks glued between them, see Fig. 3. (I also used a temporary spacer while clamping the front and back to the filler blocks.)

ROUTING ¼" RABBETS

To get a standard ⅜"-deep rabbeting bit to cut a ¼"-deep rabbet, I made a simple jig for the router table. The jig is just a strip of Masonite cut ¾" wide. Then a ½"-dia. hole is drilled near one end, see Fig. A, below.

Drill the hole centered on the width of the strip, leaving ⅛" on each side of the hole. Now round off the end of the strip so there's also a ⅛"-wide band on the end of the strip.

To use the jig, mount a ⅜" rabbeting bit in the router table and adjust it to the desired height. Then position the jig over the bit and press the hole onto the bearing. (You've effectively enlarged the bearing.) Now clamp the other end of the jig to the router table fence and rout the ¼" rabbet, see Fig. B.

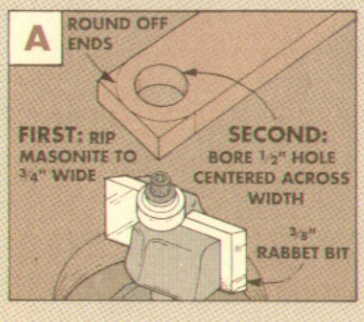

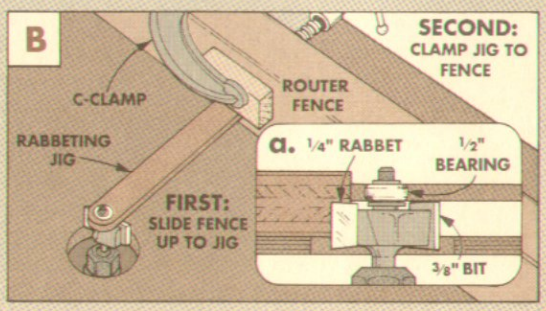

ATTACHING THE CURVED TOP

The curved top of the clock has two parts: a kerf-bent piece of Masonite that serves as a base for a strip of veneer.

TOP. To make the bent **top (D)**, begin by ripping a strip of 1/4" Masonite to width to fit between the rabbets on the case front and back. The strip should be about 24" long.

KERF CUTS. To get the Masonite to curve around the shape of the front and back, I cut a series of kerfs on this piece, see Fig. 4a. (For more on kerf bending, see page 12.)

ATTACH TO CASE. After this piece is kerfed, it can be mounted into the rabbets in the case. First spread a bead of glue in the rabbets. Then tack the bent top in place, spacing the brads along the curve, see Fig. 4b.

SAND SMOOTH. When the top is attached, sand it so the surface is smooth, and so the Masonite and plywood are flush, see Fig 5.

VENEER. You could use a piece of flexible veneer to cover the top and ends. But for the best color match with the rest of the case, I sliced a strip of veneer off the same plywood used for the case front/back. (This is easier than it sounds, see Shop Notes on page 16.)

ATTACH VENEER. To attach the veneer, first cut two **end veneer strips (E)**, and glue them to the ends of the case (with contact cement), see Fig. 6. Note that the grain runs *vertically* on these strips.

Then glue on the **top veneer (F)**, starting at the *top* of the arch and working down the flared sides. Now trim the sides and ends flush with the case with a utility knife, and lightly sand all the edges.

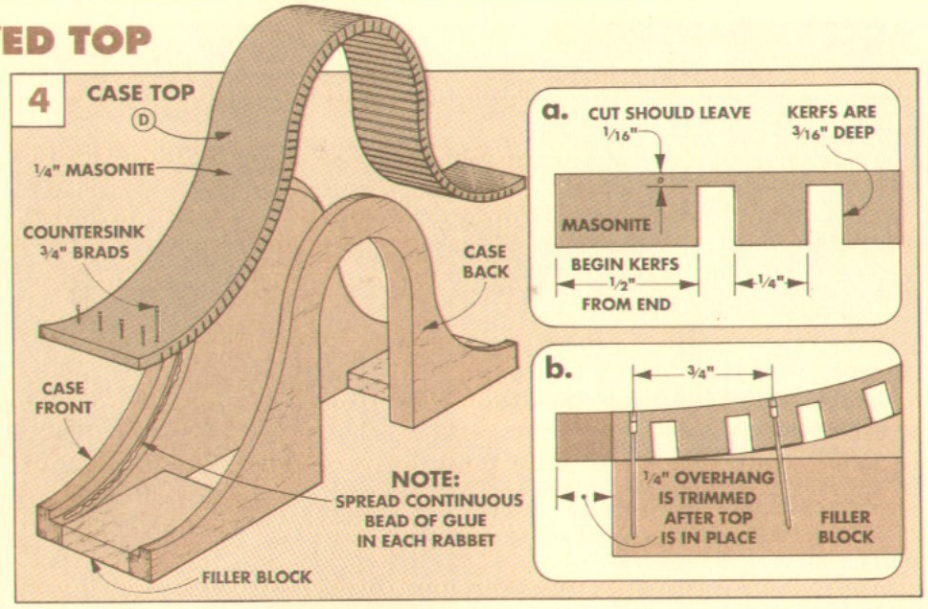

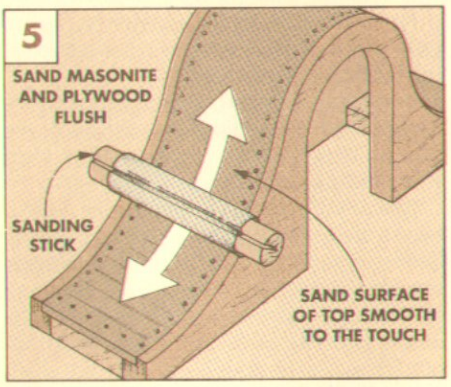

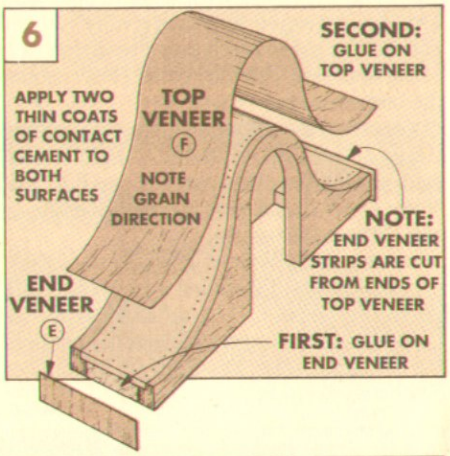

THE BASE

The double-curved case is mounted to a 3/4"-thick hardwood base. The base is screwed to the case from the bottom. For the best appearance, I tried to match the color of the base to the color of the case front.

CUT TO SIZE. To make the clock **base (G)** first cut a piece of solid wood to finished size so it's 1" longer and 1/2" wider than the bottom of the clock case, see Fig. 7.

ROUT OGEE. Next, to give the clock a more finished appearance, I routed a Roman ogee around the front and ends (but not the back) of the clock base with a 5/32" Roman ogee bit, see Fig. 9.

FEET. The clock base rests on a pair of **feet (H)**, see Fig. 8. Glue these in place to the bottom of the base, insetting them 1/4" from the side and front, but flush to the back edge, see Fig. 8.

ATTACH BASE TO CASE. When the feet are attached, the base can be screwed to the case. To do this, first drill countersunk shank holes into the bottom of the base, see Fig. 7. Then, temporarily clamp the base to the case and drill pilot holes into the case using the shank holes as guides, see Fig. 9a. Now screw the base to the case.

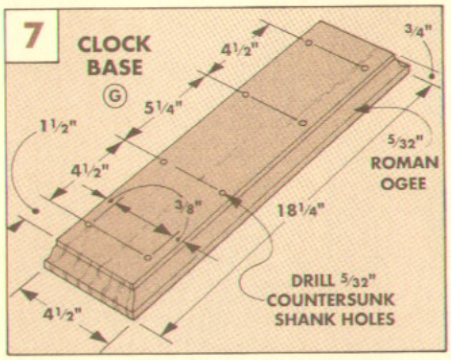

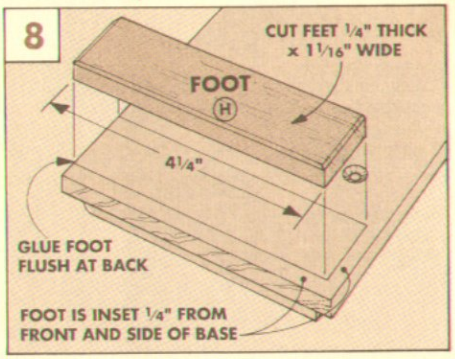

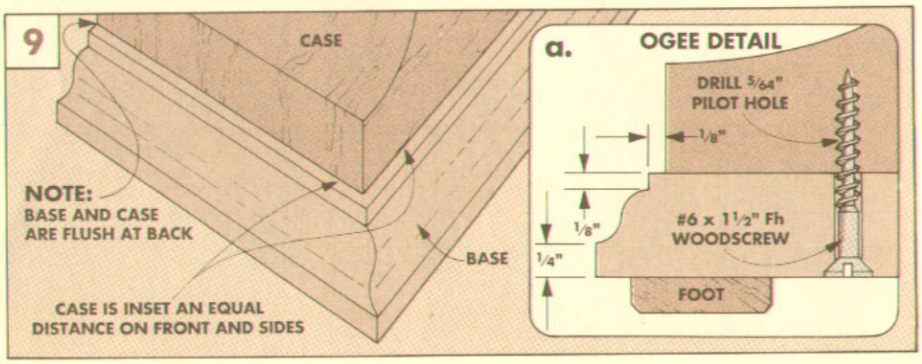

ACCESS DOOR

In order to have access to the clock works, I added a door to the back of the case. The opening in the back of the case has already been cut to shape. So now the door has to be cut to fit.

CUT TO SIZE. To make the **door (I)**, first measure the size of the door opening. Then cut a blank ½" *longer* than the opening is wide, and ¼" *wider* than the opening is tall, see Fig. 10. This will orient the grain of the door horizontally — the same direction as the case back. This size also allows for a lip on the sides and top of the door. (There's no lip on the bottom edge.)

LAY OUT ARC. After the door blank is cut to size, the next step is to lay out the arc on the top of the door, see Fig. 10. Rough cut this arc to shape with a sabre saw or band saw, and then file or sand it smooth.

RABBET. To prevent the door from falling into the case, I added a lip around the edge. This lip is formed by routing a ⅜" rabbet around the sides and top on the inside face of the door, see Fig. 10a. Note: *Don't* rabbet the bottom edge.

ROUND OVER EDGES. To soften the outside edges of the door, I sanded a slight round-over around the sides and top, see Fig. 10a. Note: *Don't* round over the bottom edge, or any of the inside edges.

DOOR CATCH. Now, to keep the door from dropping open, I installed a bullet catch at the top of the door. First, drill a hole into the top of the door, centered across the width of the door, see Fig. 11. Then tap the bullet catch into the hole.

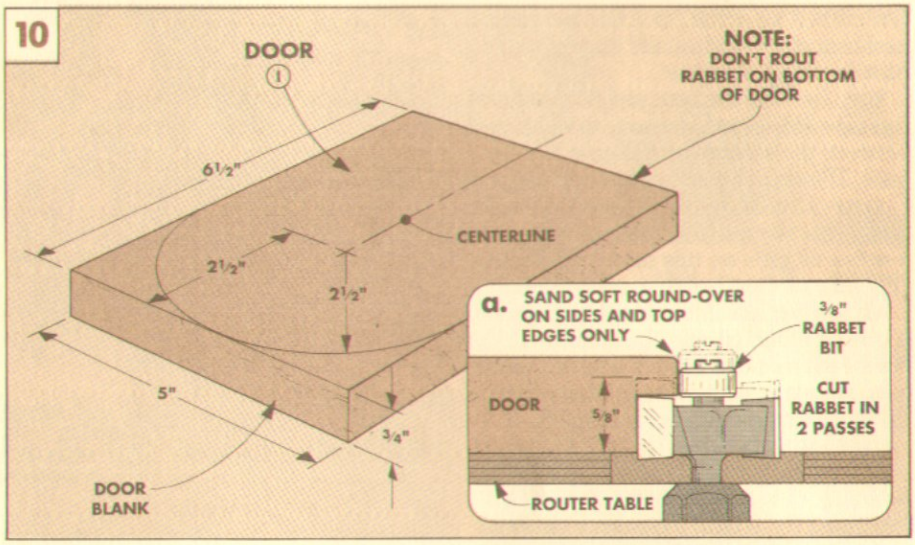

Next, you have to add a screw in the top edge of the door opening to act as a trap for the bullet catch, see Fig. 12.

DOOR PULL. Before installing the door hinges, screw the door pull to the door, see Fig. 12. (You'll need it to get the door open when testing the hinges.)

HINGE MORTISES. To attach the door, I used a dado blade to cut mortises across the bottom edge of the door for the door hinges, see Fig. 13. Set the dado blade to the same height as the diameter of the barrel of the hinge. This way, both leaves of the hinge are mortised into the door — not into the clock base, see Fig. 14a.

ATTACH DOOR. With the hinge mortises cut, the hinges can be screwed to the door. Note: The barrel of each hinge should be attached flush to the outside face of the door, see Fig. 14. With one leaf of each hinge attached to the door, screw the other leaf to the base (G), see Fig. 14a.

APPLY FINISH. It's easiest to apply the finish to the clock before installing the clock works. For my clock, I wiped on a coat of General Finishes' Sealacell and two coats of General Finishes' Royal Finish (satin). Note: If you plan to add the optional trim pieces explained on the opposite page, glue them on *before* finishing.

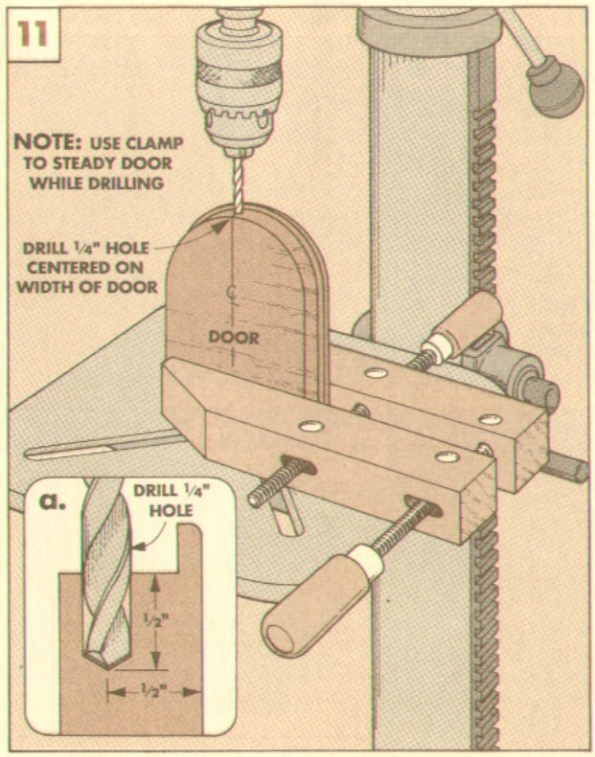

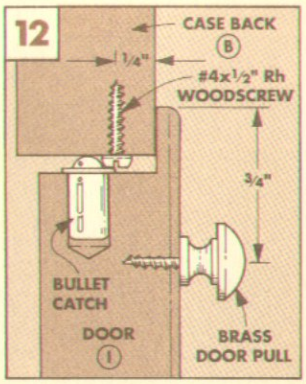

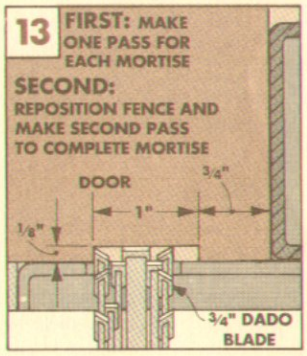

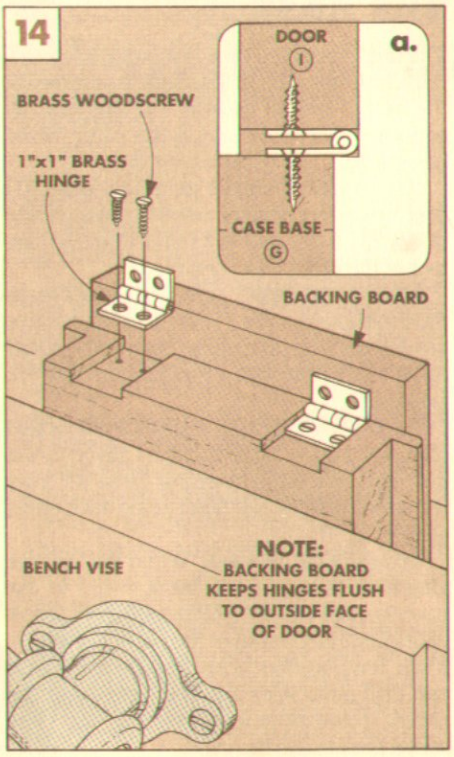

CLOCK WORKS

The case is designed to hold two different kinds of clock works — either a battery-operated quartz movement (shown here), or a brass keywind movement (see Sources, page 31). There's also a dial with a hinged glass bezel attached to the front of the clock.

Note: The directions below are for installing the quartz clock movement. Directions for installing the keywind movement and gong are included with the clock kit.

INSTALL WORKS & DIAL. To install the clock works, first locate the centerpoint of the case front and drill a ½" hole at this point for the shaft of the movement (that holds the hands), see Fig. 15. Then place the movement inside the case with the shaft protruding through this hole.

Now slide the clock dial onto the front of the case, over the hand shaft. Both the dial and the works are held to the case by threading the mounting washer and nut onto the shaft from the front.

NAIL DIAL. Before you completely tighten the mounting nut, adjust the position of the dial on the front case so there's an equal space around the sides and top of the dial.

Also, to make sure the dial is oriented properly, place a square on the clock base and line up the 12:00 and 6:00 markings on the dial. Now tighten the mounting nut, and tack the dial in place with small brass nails.

HANDS AND BEZEL. With the dial nailed in place, slip the hour and minute hands onto the shaft. Then secure the hands to the shaft with the hand nut. Finally, install the battery and adjust the clock to the correct time.

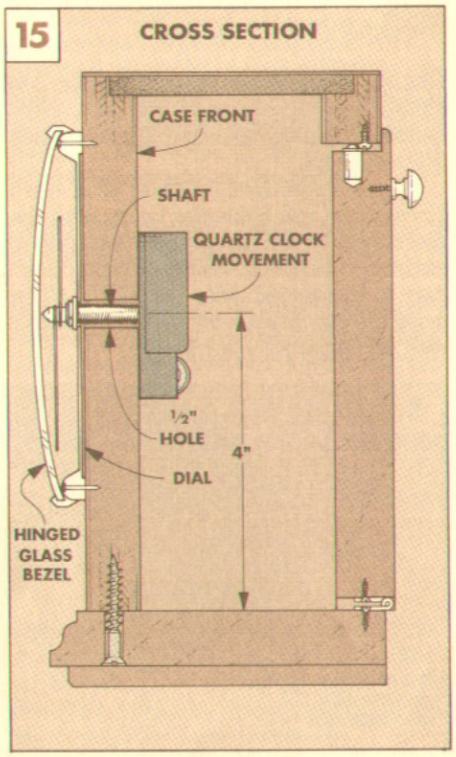

OPTIONAL TRIM

I thought it would be nice to add two decorative trim pieces to the front of the clock. All that's involved is cutting two triangular pieces from a contrasting (or complementary) piece of veneer.

Since my clock case was walnut plywood, I made the trim pieces out of walnut burl veneer, see Sources, page 31. If the burl veneer is mounted to a thin base piece, it looks thicker and stands out a little more.

TRIM BLANKS. To make the base pieces for the veneer, start by cutting two rectangular blanks from a piece of ⅛"-thick hardwood, see Fig. 2. (I cut these from scrap left over from the clock base.)

Now, cut two pieces of veneer the same size as the hardwood pieces, and glue a piece of veneer to each piece of hardwood.

DRAW PATTERN. Two things make the trim pieces look good on the front of the clock. First, the curves on the trim match the curves on the case front. Also, the spacing between the trim piece and bezel is equal to the spacing between the trim and the curved edge of the case.

To get the pieces the proper shape and size, first draw a pattern on a piece of cardboard using the radii shown in Fig. 1.

CUT TO SHAPE. After cutting the cardboard pattern to size, draw an outline of the pattern on each of the trim blanks. Then cut out the triangular trim with the band saw, see Fig. 3.

SAND BEVELS. After cutting the pieces to shape, I sanded a bevel on all three edges to help blend the trim into the clock face. All this involves is sanding the edges with a short length of dowel wrapped with sandpaper, see Fig. 4.

APPLY TO CASE. To get the trim pieces aligned properly, first temporarily position them on the case front. Then draw a light pencil reference mark around each piece.

Now apply glue to the back of the trim pieces and press them in place with hand pressure for about a minute, using the marks to line them up properly.

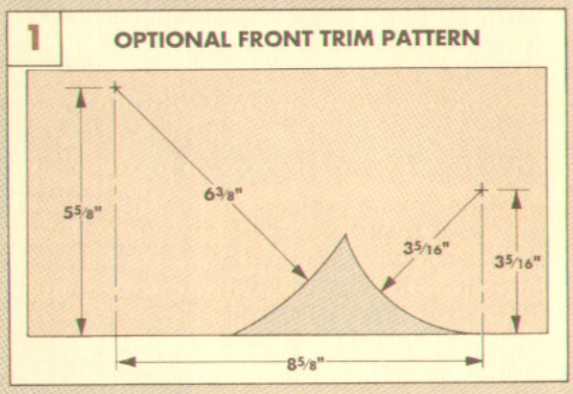

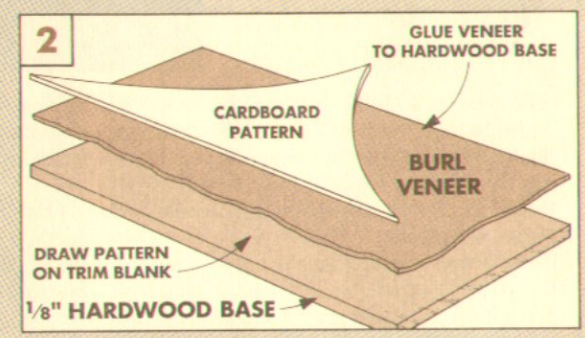

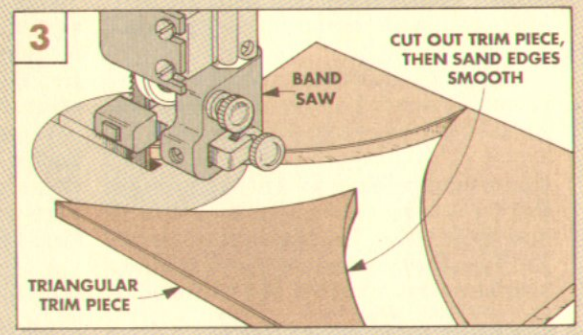

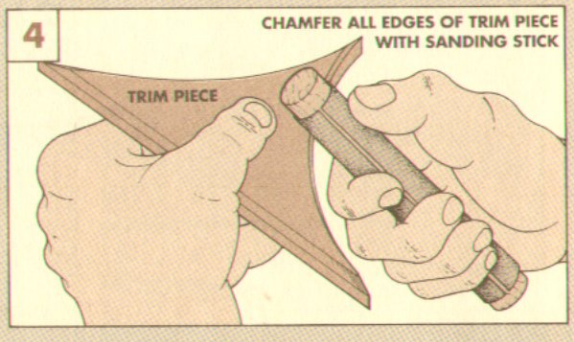

Kerf Bending

Of all the ways to bend wood into a gentle curve, I think kerf bending is the easiest. It doesn't use special equipment as steam bending does, or a lot of forms and clamps as with bent laminations. It's just a matter of cutting a series of grooves (kerfs) to relieve the back of the curve.

This technique has been used in general construction to bend plywood around cabinets or solid wood around arched windows. But it can also be used in furniture. The Curved Front Table apron (page 18) and the top of the Tambour Clock (page 6) are a couple of examples.

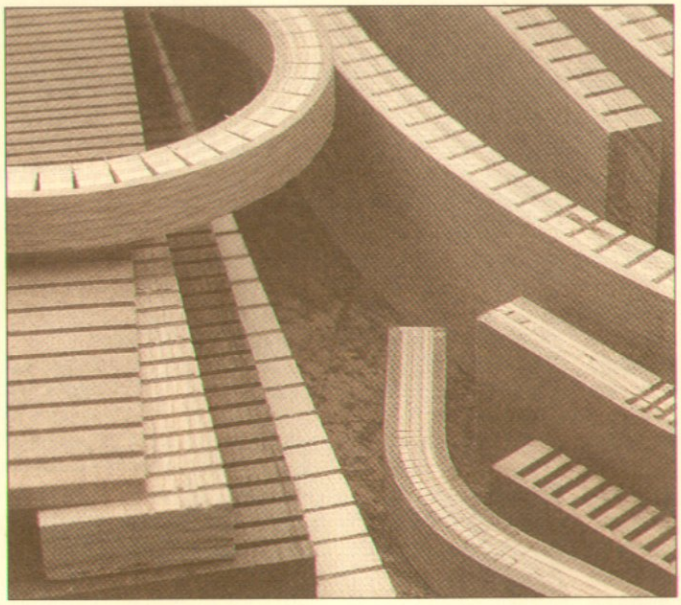

QUESTION: *How are kerfs used for bending wood?*

A kerf is just a slot. When you cut kerfs for bending, you don't cut all the way through the wood — just part of the way. If you make a series of these deep kerfs side-by-side the wood becomes flexible, and can be bent in a curve, see photo.

What you're doing is relieving one face of the workpiece so you can bend it. The distance between the kerfs, their depth, and the wood you choose will determine the flexibility of the stock and the radius of the bend.

QUESTION: *Do the kerfs have to be consistently spaced, and if so, won't that take some kind of special jig for my saw?*

One of the nice things about kerf bending is that the spacing between the kerfs doesn't *have* to be exact. The piece will still bend. But if you want the curve to be as uniform as possible, you should use some form of indexing. This can be as simple as a pencil line or just a brad or nail driven into an auxiliary fence (see page 15 for more on this).

QUESTION: *After cutting all those kerfs, I'm only left with a thin piece of wood. Wouldn't it be easier to just use a piece of veneer and bend it?*

Though veneer will bend easily, it won't be as strong as kerf-bent wood. This is because the thin "web" that remains after the kerfs are cut is supported by the "ribs" left between the kerfs, see Fig. 1.

Veneer, on the other hand, could easily buckle and break if it's not supported. (Veneer can be wrapped around a solid piece that's cut to a curve, or even a piece that's been kerf-bent, see page 9.)

A piece of unsupported veneer is also likely to warp (usually cup) with changes in humidity. But on a kerf-bent piece, the ribs support the thinner wood and prevent warping, see Fig. 2. Note: A kerfed piece can be fragile until it's glued in place. Don't give in to the temptation to see how far it will bend. (I've done that and broken more than one kerfed piece.)

QUESTION: *If kerf bending is so easy, why would anyone steam bend thick strips or laminate thin strips?*

The main reason is appearance. If you kerf bend, the kerfs that are cut in the edge and back of the wood are visible.

Kerf-bent pieces also require a support piece. This piece adds to the strength of the bent piece and is usually a part of the project. It may even hide the kerfs. On the Tambour Clock, for example, the front and back of the clock support the curved top and also hide the kerfs.

QUESTION: *But what if the workpiece I'm kerf bending isn't attached to any type of support? Is there any way I can strengthen the kerfed piece?*

One way to strengthen the kerfed piece, is to simply apply glue inside the kerfs while bending the piece to shape. I use hot-melt glue to do this.

There's another method that both strengthens and hides the kerfs. With the piece held in its curved position, glue a slightly oversize thin veneer or plastic laminate to the kerfed side, see Fig. 3. Then when the glue dries, trim the laminate flush with the edges of the workpiece.

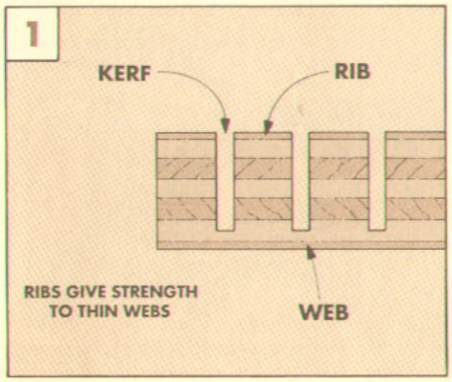

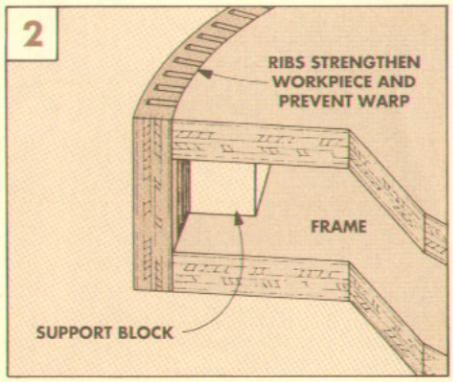

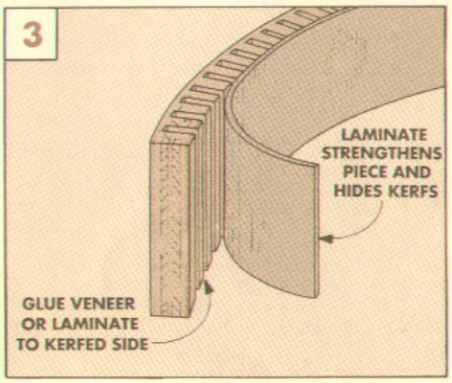

KERFING DIFFERENT MATERIALS

In addition to kerf spacing and depth, the material you choose also affects how tight a radius you can bend and still get a smooth surface. Most materials used in the shop can be kerf bent. And with some materials (such as plywood and particleboard), it may be the *only* way to bend them successfully.

SOLID WOOD

As you might expect, the solid woods that bend the best using steam or thin laminations are also the best choice for kerf bending. Woods such as oak, walnut, mahogany, and ash are flexible and bend well.

Whatever type of wood is used, choose pieces for bending with grain that runs in a fairly straight line, see photo (A). Highly figured woods which have unpredictable grain patterns often break as they're bent.

QUESTION: *Does it matter how the kerfs are oriented in relation to the direction of the grain?*

To minimize breakage, it's best to cut the kerfs *across* the grain, see Fig. 4. Then the fibers of the wood will hold the whole piece together as they wrap around the curve. If you cut the kerfs *with* the grain, the piece may break along the grain lines as it's bent.

PLYWOOD

Hardwood plywood with softer inner cores bends easier than softwood (fir) plywood. There are two reasons for this.

First, the face veneer on softwood plywood is thicker than that used on hardwood plywood, see photo (B). And these thicker veneers aren't as flexible as the thin ones.

Second, many hardwood plywoods use lauan for some inner plies, see photo (C). Lauan (also called Phillipine Mahogany) is more flexible than the fir plies used in most softwood plywoods and bends easier.

QUESTION: *Should the kerfs also be cut across the face grain of plywood?*

Yes, but for different reasons. It has to do with the ply that lies *beneath* the face veneer, see Fig. 5. After plywood is kerfed, the web that remains consists of the thicker second ply and the thin face veneer, see photo (C).

If plywood is kerfed across the face grain, the grain of the second ply runs *with* the kerf. Usually, cutting with the grain weakens wood. But with plywood, the face veneer holds it together (and allows it to flex).

COMPOSITES

Composites such as particleboard and hardboard (Masonite is one common brand name) have an advantage over both solid wood and plywood — there's no grain direction to worry about, see photo (D).

Since it's flexible to begin with, Masonite bends easily when it's kerfed. Particleboard, on the other hand, doesn't kerf bend as well. It's made with larger, more loosely compressed particles and can break easily when stressed — especially if the particleboard surface is scored (such as when kerfing).

The composites do have another advantage over solid stock and plywood. They bend better in both directions. Since there's no dominant grain to split along, you can bend the piece so the kerfs close in or open up. This means you can actually form an S-curve, (see Fig. 6 and the Tambour Clock).

KERF DEPTH

QUESTION: *Now that I've selected the material I want to bend, how deep should I cut the kerfs?*

Fortunately there are some simple rules and guidelines for kerf depth. Generally, the deeper the kerf is cut, the tighter the radius you can bend. At the same time, the deeper the kerf is cut, the weaker the webs will be. What you want to do is cut the kerf as deep as possible without weakening the wood.

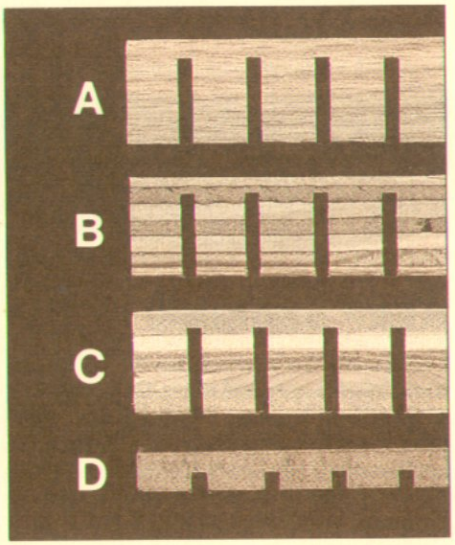

For solid woods, this means leaving a web that's about an 1/8"-thick, see photo (A). For plywood, the general rule is to cut deep enough so you just barely score the second ply (the layer under the face veneer), see photo (C). And for Masonite, the kerf depth should be about one-half (or a little more) of the thickness of the material, see photo (D).

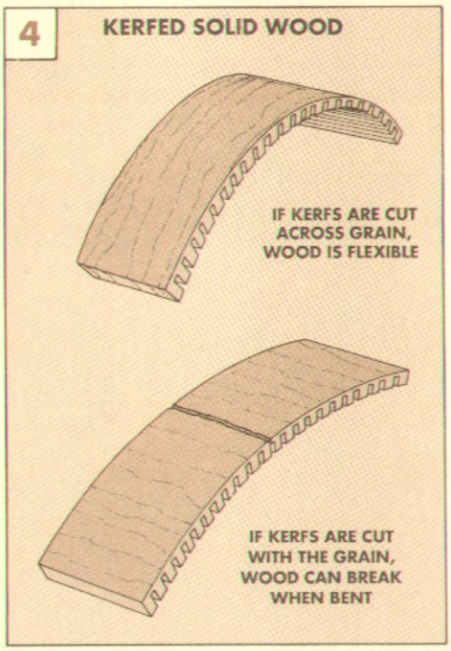

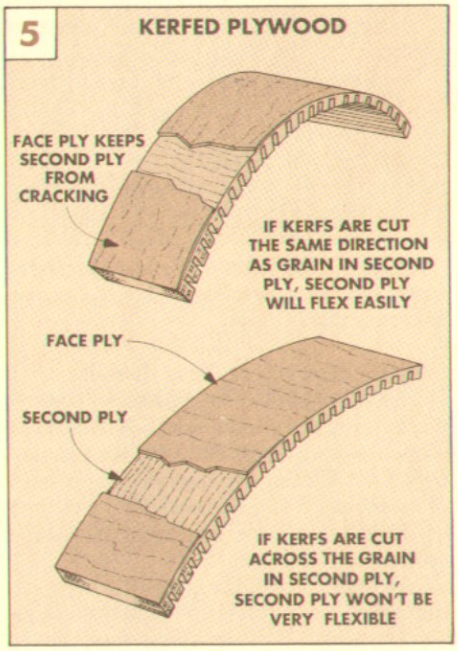

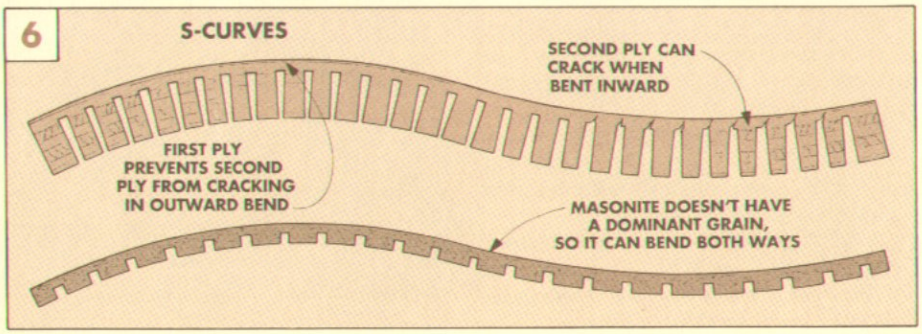

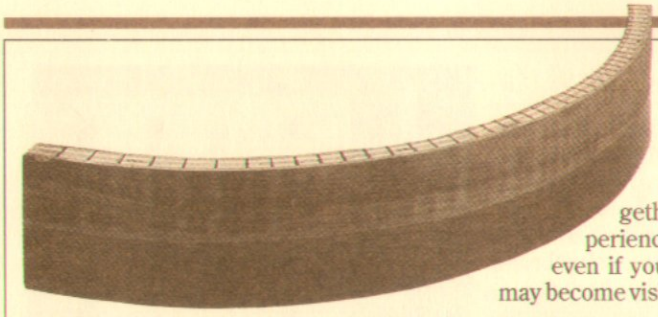

KERF SPACING

The spacing between kerfs (or the width of the ribs) not only will affect the maximum radius that you can bend, but also how *smooth* the bent piece will look. The reason kerf spacing is linked to the smoothness of the bend has to do with a problem that's unique to kerf-bending called "flats", see photo above.

QUESTION: *What is a flat, and how can I minimize this problem?*

Flats are caused by the difference in flexibility between the thick ribs and the thin webs. As the wood is bent around a form, the webs are flexible and will bend in an attempt to follow the curve. But the ribs are much more rigid and won't bend. This creates a flat surface on the face of the curved piece.

Small flats can be easily removed by sanding. But the wider the flat is, the more sanding you'll have to do. To reduce this problem, choose the tightest spacing possible without making the ribs so narrow that they'll crack and break off.

QUESTION: *What is the best spacing to use when kerf bending? Are there any general rules?*

In most cases, I space the kerfs about ¼" to ⅜" apart — even if the radius is large. It might seem like a lot of work to cut kerfs so close together (especially on a long piece), but it's not. Cutting kerfs is fast work. It's sort of a trade-off. If you spend a little more time kerfing up front, you'll spend a lot less time sanding out flats later.

As a general rule, the closer the kerfs are together, the tighter the radius you can bend, see Fig. 7. But more important, closely spaced kerfs provide a smooth curve.

For example, I found that you could bend ¾"-thick stock around a 12" radius by using ½" spacing — but there were noticeable flats, see Fig. 8.

By changing the spacing to ¼", I was able to bend a similar piece easier, so the flats could hardly be seen, and easily removed with light sanding.

Note: Unless the radius is extremely large, I wouldn't space the kerfs greater than ¾". Any greater and you risk creating flats that you'll never be able to remove.

SANDING

If you space the kerfs together closely, you may still experience flats to some degree — even if you can't see them. But they may become visible when you apply a finish.

QUESTION: *What's the best way to sand away the flats from a workpiece?*

I use a hardwood sanding block (not a power sander). Take smooth, gradual strokes following the contour, and constantly check the surface of the work. Stop sanding as soon as all the flats disappear — don't oversand. If you do, you may loose the uniform curve that you've worked hard to create. And, if you oversand, you could weaken the web or even sand all the way through it.

When sanding plywood, there's another problem. Since face veneers on hardwood plywood may be 1/32"-thick or less, it's very easy to sand right through the face veneer, see Fig. 8. So sand cautiously — checking regularly to see if the flats have disappeared.

And again, don't use power sanders. They can remove too much wood, too quickly.

FINISHING

QUESTION: *What about finishing kerf-bent pieces? Are there any tricks to that?*

I like to apply a light coat of sealer to the kerf bent piece and then examine the surface closely. To do this, I use a light source from behind the piece. This lets me check the workpiece one more time for flats before applying the final coats.

I also recommend a satin finish rather than a high gloss. The reason for this is if there are any flats (even small ones), they'll show up more with a gloss finish than with a satin or matte finish.

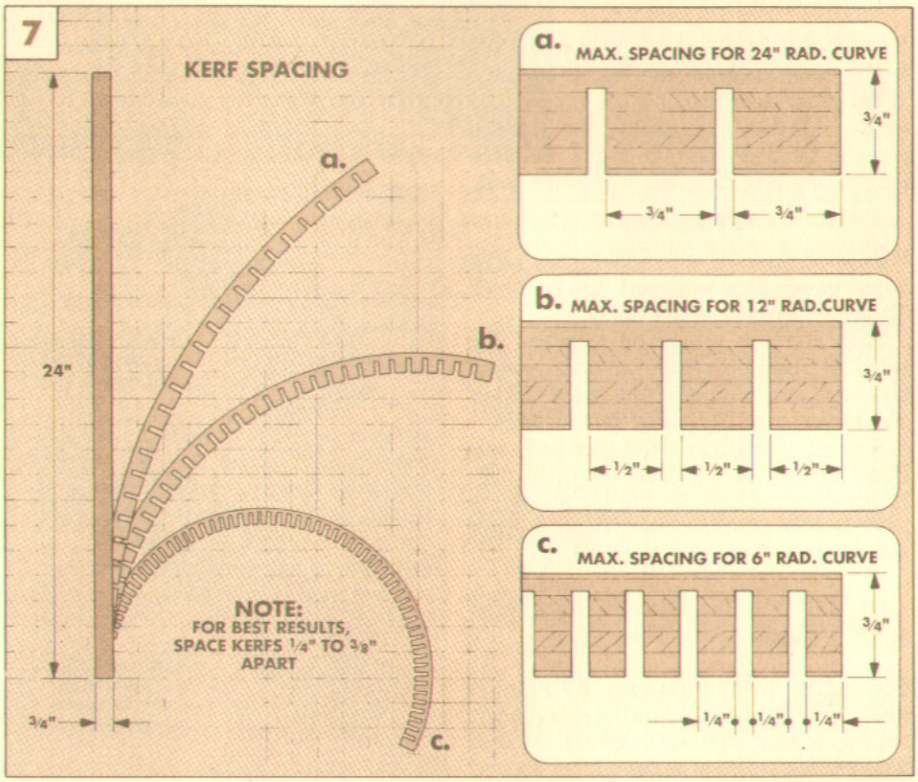

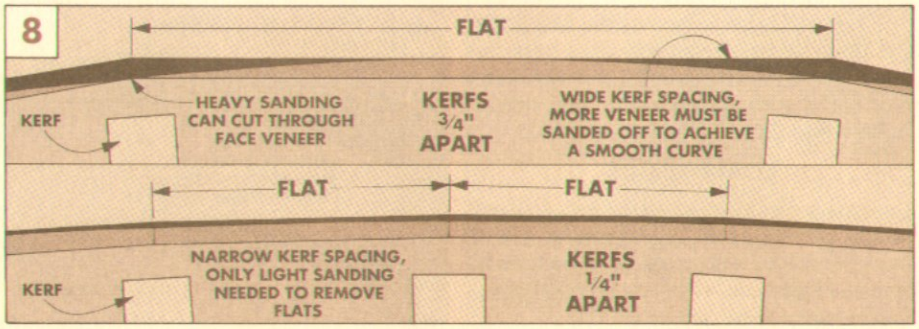

KERFING TECHNIQUES

There are a number of ways to kerf a workpiece. You can use a radial arm saw, table saw, band saw, or even a hand saw to do this.

But no matter which saw you use, it's best to use an indexing system to keep the spacing uniform. The more uniform the spacing is, the more uniform the curve will be.

The type of indexing system and how easy it is to use determine which type of saw to use for kerfing.

RADIAL ARM SAW

When I need to cut a lot of kerfs in a long narrow board, I choose a radial arm saw. It lends itself best to kerfing since the saw kerf is on the top of the workpiece where you can see it, see Fig. 9. It's also easy to align the kerfs to an indexing line drawn on the fence.

Draw an index line on the fence so the distance from the line to the blade equals the desired spacing between the kerfs. Then align the end of the workpiece with the index line and cut the first kerf. After that, align the edge of the just-cut kerf with the index line to make the next kerf, see Fig. 9.

When kerfing on the radial arm saw, be sure to hold the workpiece flat. Otherwise the workpiece may rise up and you'll end up cutting all the way through.

TABLE SAW

On the table saw, the same method can be used by drawing the index line on the table top or an auxiliary fence that's attached to the miter gauge. In either case, it can be difficult to see the mark — so I usually use a different method.

To index the kerfs, I drive a No. 4 screw into the auxiliary fence and cut off the head, see Fig. 10. (The shaft of a No. 4 screw has a diameter just slightly less than ⅛" to fit the kerf of a typical saw blade.) As each kerf is cut, just lift the board and place it over the screw, see Fig. 10.

One advantage to using the table saw is that you can kerf a large workpiece, such as a 4x8 sheet of Masonite.

Shop Note: In most cases, when you kerf a workpiece, you're cutting across the grain. Because of this, I found that a 40-tooth carbide-tipped combination blade worked best for cutting kerfs on either the table saw or the radial arm saw.

BAND SAW

Cutting kerfs on a band saw is sort of a combination of both previous methods. An indexing line is drawn on the fence (as on the radial arm saw). But for the band saw I clamp the fence *behind* the blade and use it as a depth stop as the board is pushed into the blade, see Fig. 11.

Since the blade is so thin on a band saw, you can cut extremely thin, closely spaced kerfs. This means a smooth curve with minimal sanding.

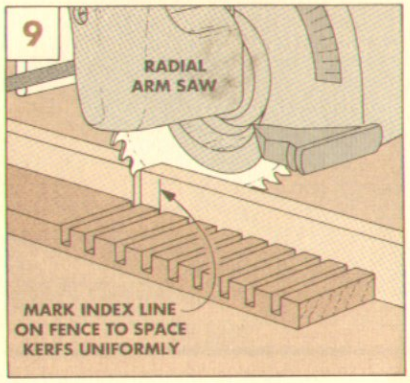

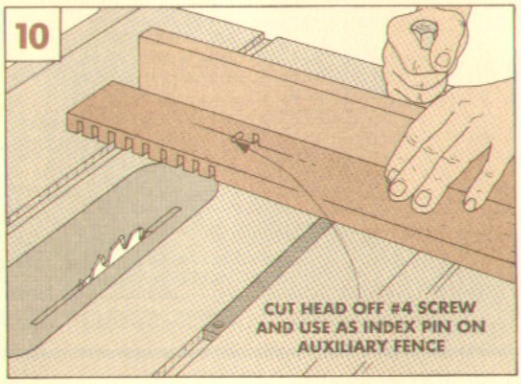

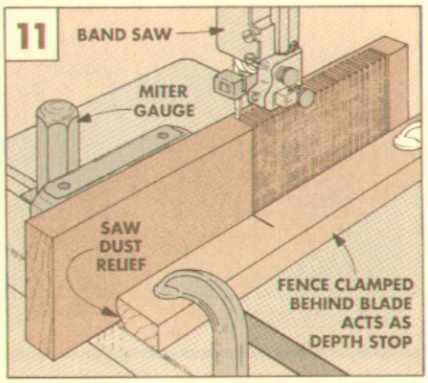

CORNER BLOCKS — A KERFING ALTERNATIVE

There's another interesting way to bend plywood or solid wood around a very tight corner — using a solid wood corner block and a single large kerf (dado), refer to photo on far right. Using this method, the thin outer face of the workpiece is the only part that actually bends around the corner. For strength, it's backed up by the corner block.

To do this, start by cutting a block of solid stock that's shaped to the curve. You can cut a radius on the block with either a band saw or a sabre saw, then sand the curve smooth.

To determine the width of the single kerf (it's actually a dado), first place the corner block on the piece to be bent.

Then, press down on the block to keep it from slipping and rock it in both directions so the end of the block touches the workpiece, see photo on left. Now make a mark at each end to define the kerf.

Next, waste away this marked section of the workpiece, see center photo. Note: Test the fit of the corner block and sneak up on the final width of the dado by taking a series of cuts.

Finally, apply glue to the corner block and clamp it in place.

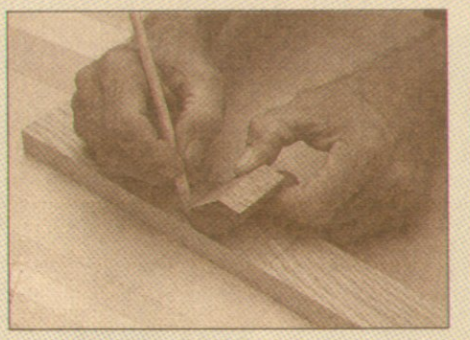

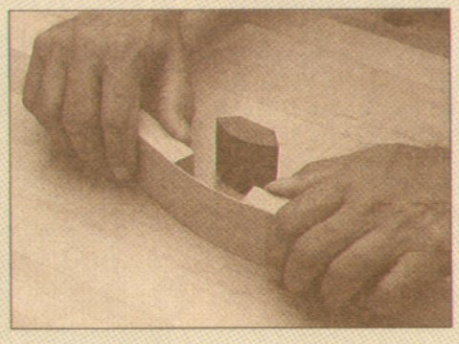

Shop Notes

DRAWING A PARTIAL ELLIPSE

■ The top of the Curved-Front Table on page 18 is semi-elliptical—it's shaped like an oval split in half. To make one, you'll need to draw a partial ellipse. All it takes is a pencil, a piece of thin wire and a couple nails.

LAY OUT. Start by drawing a straight line as long as the length of the template for the table top (33"), see Fig. 1. Then mark one end of the line **A**, and the other end **C**. Now find the centerpoint and mark it **B**.

Next, draw a perpendicular line from the centerpoint (**B**). Make it the same length as the width of the table top (11"). Mark the top end of this line **D**.

The next step is to locate two nail points. To do this, use a ruler or compass to find the distance from **A** to **B** (or **B** to **C**, it should be the same). Then measure this distance from point **D** to line **AB**, and also to line **BC**, see Fig. 2. These are your nail points, mark them **N1** and **N2**.

NAILS AND WIRE. So much for the hard part. The next step is to drive a nail or brad into **N1**, **N2**, and **D**. Then loop a piece of thin wire (I used 32 gauge) tightly around all three nails and twist the ends together. Note: Don't use string, it stretches too much.

DRAWING AN ELLIPSE. Finally, to draw the ellipse, remove the nail at **D** and replace it with a pen or pencil point. Now, keeping the wire taut, draw an arc from **D** to **A** and from **D** to **C**, see Fig. 3.

Note: If you're using a pencil, cut a notch for the wire to ride in about ½" from the pencil tip, see Fig. 3a. This will keep the wire from sliding and make it easier to draw an accurate ellipse.

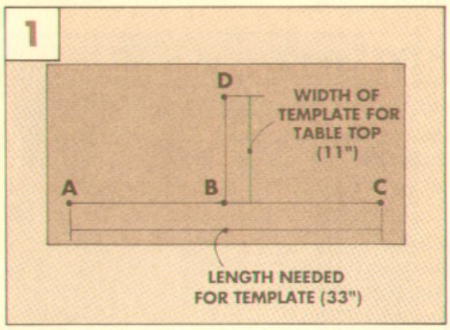

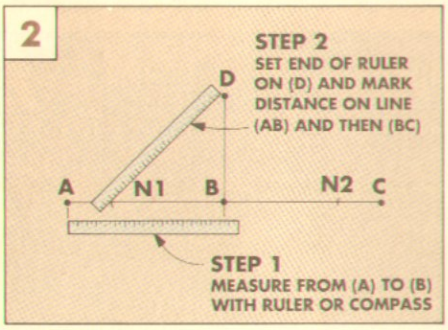

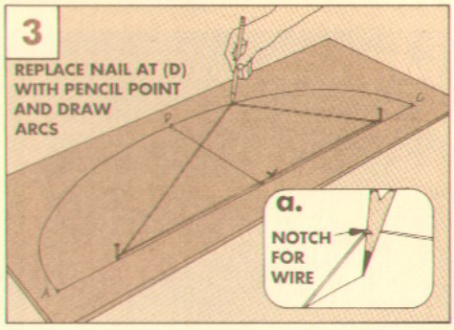

RESAWING VENEER FROM PLYWOOD

■ I wanted the wood on the top and ends of the Tambour Clock on page 6 to match the veneer of the plywood I used for the front and back of the clock. So I resawed the veneer off a piece of the same sheet of plywood that I used for the front and back.

PLYWOOD BLANK. To do this, start with a piece of plywood slightly wider and a little longer than the finished size you'll need for your project. (For the Clock top and end strips I used one piece 4½" wide and 25½" long.)

SAW SET-UP. Though the veneer could be resawn off the plywood with a band saw, this time I decided to use the table saw with a combination blade. Start by raising the blade so it's slightly higher than half the width of the plywood.

Now comes the tricky part—setting the rip fence so a thin layer can be cut off the waste side of the blade, see Fig. 1. What you're trying to do is cut off the face veneer plus a little bit of the ply just underneath (called a crossband) which gives the face veneer some support.

TRIM OFF THE VENEER. Now turn on the saw and *slowly* run the plywood over the blade. Then flip the piece end for end and make a second cut to remove the veneer and a thin layer of the crossband, see Fig. 1.

CLEAN OFF CROSSBAND. The next step is to remove the crossband from the back. You need to do this for two reasons. First, the thickness of the veneer has to be consistent so it will glue down smooth and flat. Also, you don't want any of the crossband to show along the edge of the veneer once it's glued down.

I removed the crossband with a portable belt sander, using a 120 grit sanding belt, see Fig. 2.

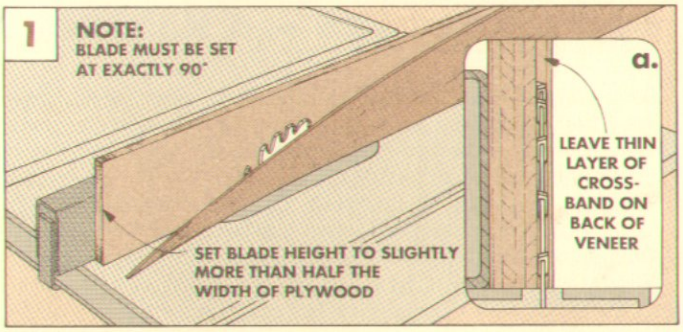

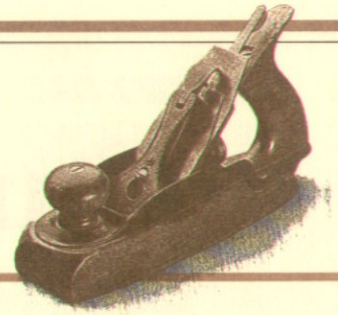

PILOT STRIP FOR ROUTER

■ When it came time to make the top for the Curved-Front Table shown on page 18, there was a problem. I wanted the top to have the exact same elliptical shape as the case — only larger.

The best solution was to find a way to use the same template that I made for the case parts.

PILOT STRIP. The technique I came up with is to tape a strip of wood to the base of the router, see Fig. 1. This pilot strip keeps the router bit a uniform distance from the edge of the template. And that makes the top larger.

To make the pilot strip, cut a small scrap of stock 1½" wide and 5" long. The strip should be the same thickness as the template (¼" in my case).

Then tape the strip to the router base using double-sided carpet tape. Position the edge of the strip so it just touches the edge of the straight bit you use for trimming, see Fig. 1.

USING A PILOT STRIP. Now, to use the pilot strip, start by taping the template to the workpiece and cutting the workpiece slightly oversize (refer to Fig. 26 on page 25). Then set the router on the template so the edge of the pilot strip rides against the edge of the template, see Fig. 1a. Try not to "rock" the router along the edge of the template as you rout the workpiece. Rocking will increase the distance between the template and the bit.

INSIDE CURVES. This works well for routing straight stock and outside (convex) curves, such as the Curved-Front Table. But a straight pilot strip won't allow the bit to go into an inside (concave) curve. In this case, I use a round pilot, see Fig. 2.

To make a round pilot, draw a circle on the pilot stock with your compass set to the distance you want to increase the template plus half the diameter of the bit. Now cut out the circle.

Then drill a hole in the center of the pilot slightly larger than the bit. Now attach the pilot to the router base making sure it's exactly centered over the bit.

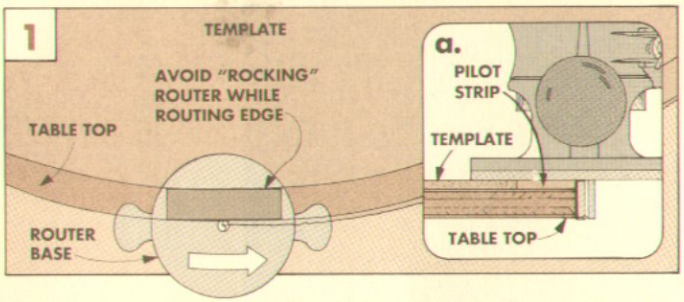

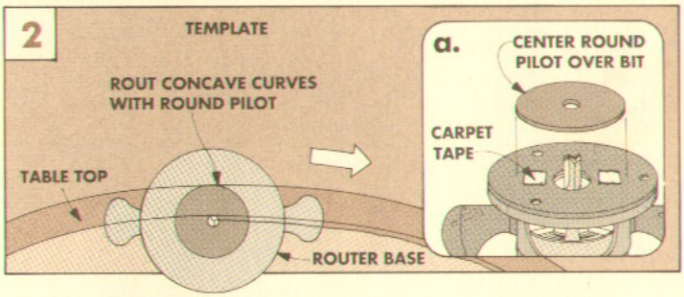

RABBETING WITHOUT CHIPOUT

■ When routing a rabbet along the corner of a piece of wood, there's always a chance of chipout along the *outside* face of the workpiece, see Fig. 1. (There shouldn't be any chipout along the *inside* of the rabbet since the wood fibers behind those being cut support them.)

Along the outside face, the fibers aren't supported. If the grain direction of the workpiece runs at an angle, there's likely to be chipout along the top outside edge of the rabbet, see Fig. 1.

CLEAN EDGED RABBET. Since all faces of the legs on the Curved-Front Table shown on page 18 are exposed, it's important that rabbets with two clean edges be cut for the corner inlays. (Normally, this isn't a problem since chipout on the outside face is often hidden by a piece of wood fitted in the rabbet.)

Typically, a ¼" x ¼" rabbet might be cut in a single pass with a straight bit on the router table. Or in two passes, raising the bit between passes.

TWO-PASS METHOD. For the Curved-Front Table, I used a two-pass method. But instead of raising the bit between passes, I cut the first pass with a straight bit set at full height. The difference is that I set the router table fence so only 1/16" of the bit was exposed, see Fig. 2. This first pass lightly skims the face and greatly reduces the chance of any chipout along the top outside edge of the rabbet.

Then, to complete the rabbet, reposition the fence to expose ¼" of the bit and make a clean full-depth cut along each corner of the leg, see Fig. 2.

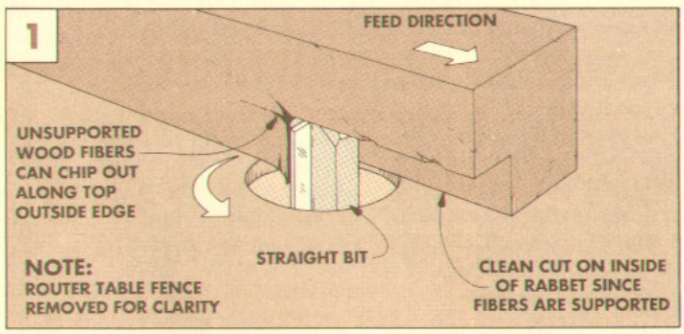

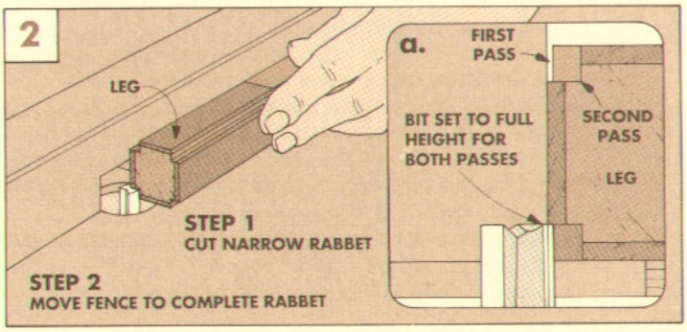

Curved-Front Table

A curved apron and tapered legs with inlays are two of the challenges in building this classic table. But how do you inlay the legs? They're not really inlays, but a simple technique to give it the look of inlay.

There's something about this Curved-Front Table that brings out the curiosity in any craftsman. How are the curved aprons made? Is a thick piece used and then cut into a curved shape? Or is it bent somehow? And how about the legs. I'm sure some kind of fancy jig was used to get the inlays so tight.

Not at all. In fact, both of these seemingly complex woodworking tasks have simple solutions.

CURVED APRONS. The curved aprons of the table are made from plywood, and have a series of saw kerfs cut in the back to allow the wood to bend. (We've included a separate technique article on kerf bending in this issue, see page 12.)

TAPERED LEGS. The "inlaid" legs are another example of a simple solution to a difficult task — how do you inlay tapered strips on all four faces of each leg?

In what could almost be called a reverse inlay technique, I wasted away the wood from the leg to leave the "inlay." Then, I glued thin strips of contrasting wood where the wood had been removed. It's that simple.

WOOD. I used solid cherry for the legs, and cherry plywood for the aprons and table top. And, for the contrasting wood trim, I chose walnut. I also used some ½"-thick plywood to build the inner case that the aprons are bent around.

OPTIONS. Although I really like the look of the inlaid legs and the inlay on the top of this table, it can be built without this trim. A table like this, (made of solid cherry) appeared in the shop recently and looked quite elegant.

FINISH. To finish the table, I wiped on one coat of General Finishes' Sealacell and two coats of their Satin Royal Finish top coat.

EXPLODED VIEW

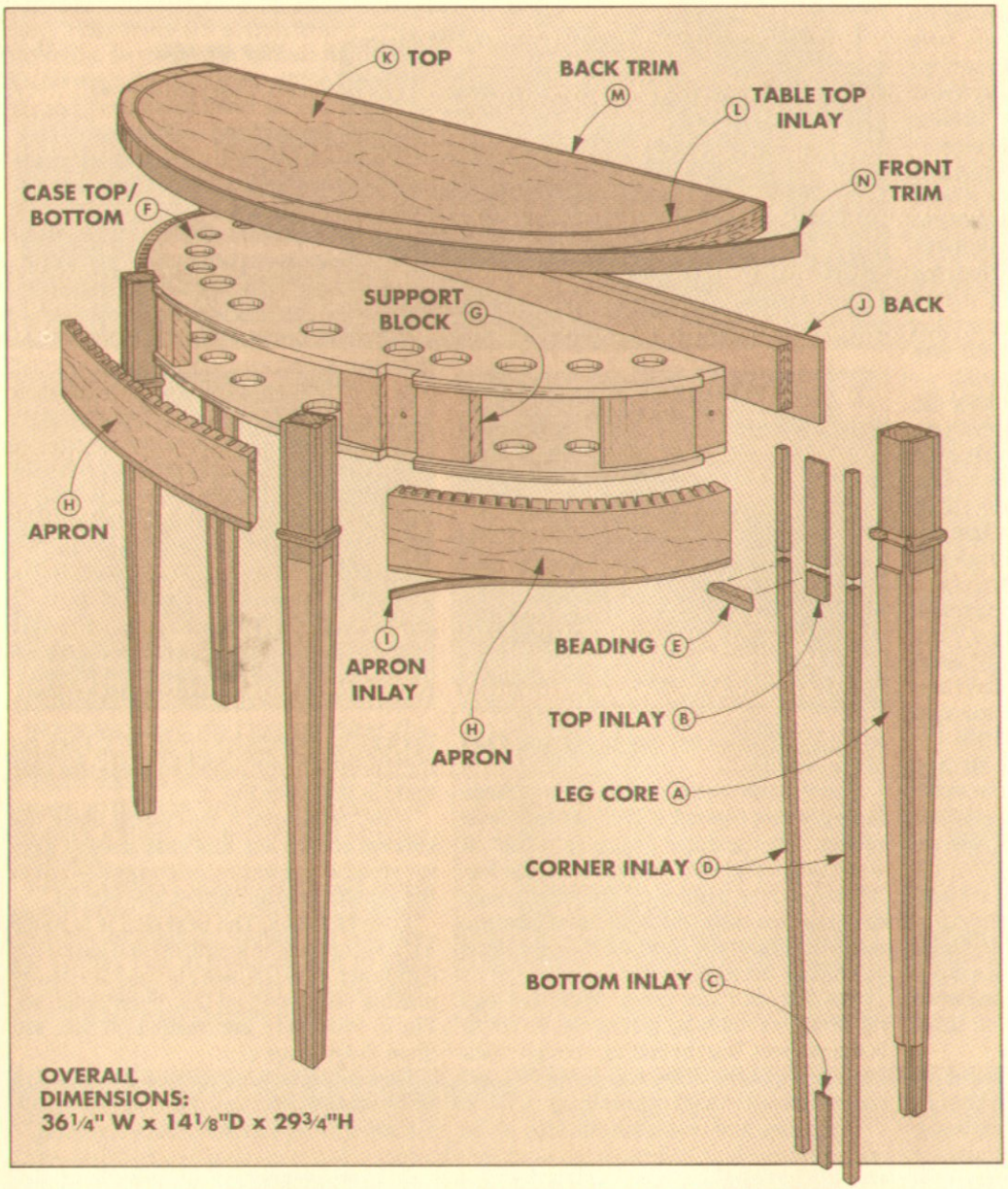

LEG DETAIL

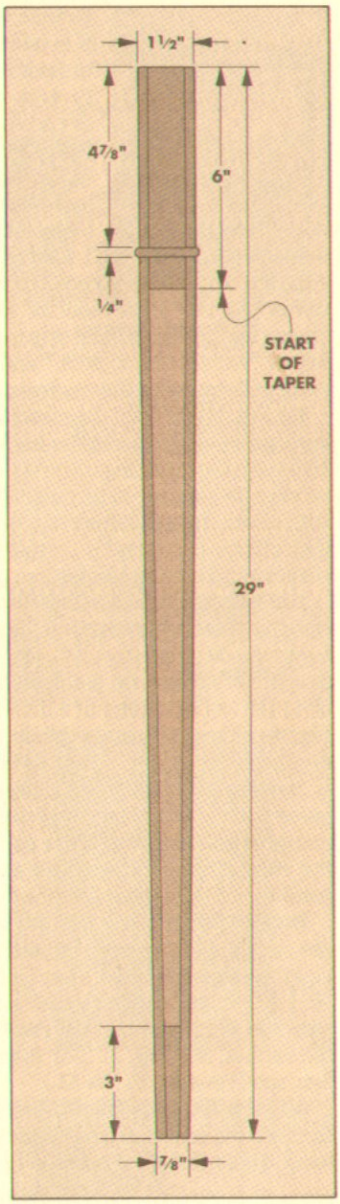

MATERIALS LIST

A	Leg Core (4)	1½ x 1½ - 29
B	Leg Top Inlay (16)	⅛ x 1¼ - 6
C	Leg Btm. Inlay (16)	⅛ x ⅞ - 3
D	Leg Corner Inlay (16)	¼ x ¼ - 30 (Rgh)
E	Leg Beading (1)	¼ x ¼ - 30 (Rgh)
F	Case Top/Btm. (2)	12⅜ x 33 - ½ ply
G	Support Blocks (4)	1½ x 3 - 6
H	Apron (1)	4 x 48 - ¾ ply
I	Apron Inlay	1/16 x ¼ - 48 (Rgh)
J	Back (1)	4 x 32¼ - ¾ ply
K	Top (1)	13⅞ x 36 - ¾ ply
L	Table Top Inlay	⅛ x ¼ - 54 (Rgh)
M	Back Trim (1)	⅛ x ¾ - 36
N	Front Trim (1)	⅛ x ¾ - 54 (Rgh)

- General Finishes' Sealacell Sealer
- General Finishes' Royal Finish (Satin)

CUTTING DIAGRAM

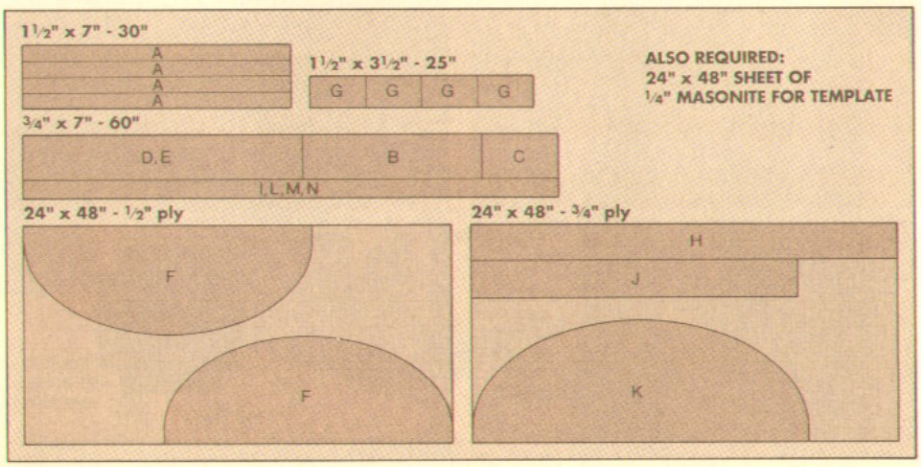

TAPERED LEGS

Before starting on this table, you have to decide if you want to add inlays and decorative beading to the legs, or not.

The cover of this issue shows a table being built *without* these parts. If you don't want to add them, you can start on the legs by cutting four **leg cores (A)**, 1½" square and 29" long. (I used cherry for the legs.) Then skip to the section below "TAPER LEG CORES," and then continue with building the case on page 22.

INLAYS. If you want the inlaid look for the legs, go ahead and cut the **leg cores (A)**. Although the inlaid legs (shown in the photo on page 18) appear to be made from walnut with cherry inlays, I think it's easier to start with cherry cores and inlay walnut into the corners and the top and bottom of the legs.

TOP RABBET. After cutting the cores, cut a wide, shallow rabbet around the top of each leg for the leg top inlays (B), see Fig. 1. Position the table saw rip fence so it's 6" away from the *outside* edge of a dado blade, see Fig. 1a. Then adjust the blade to cut to a depth of ⅛".

Now cut a shoulder on each face of the leg, using the rip fence as a stop and the miter gauge to keep the workpiece square. When the shoulders are cut, waste away the remaining stock to the end of the leg.

TAPER LEG CORES. After the top rabbets are cut on all four legs, the next step is to taper the legs, refer to the Leg Detail on page 19. I did this on the table saw using a taper jig set to begin the taper at the shoulder of the rabbet, see Fig. 2. (For more on taper jigs, see *Woodsmith* No. 61.)

BOTTOM RABBET. Once a taper is cut on the legs, the rabbet can be cut for the bottom inlay. To do this, first position the rip fence so it's 3" from the *outside* edge of your dado blade, see Fig. 3.

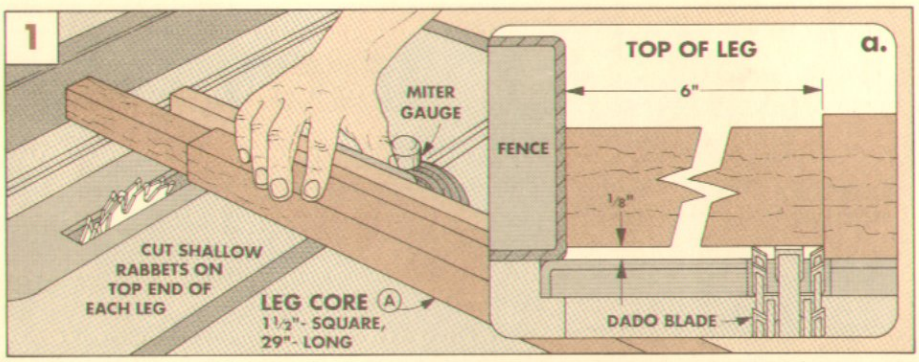

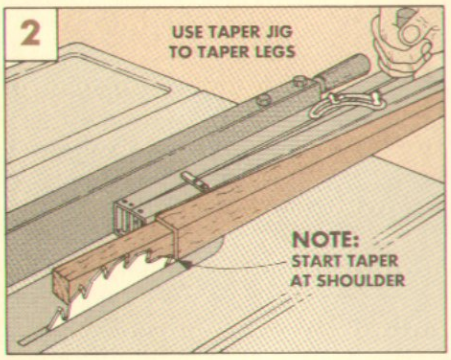

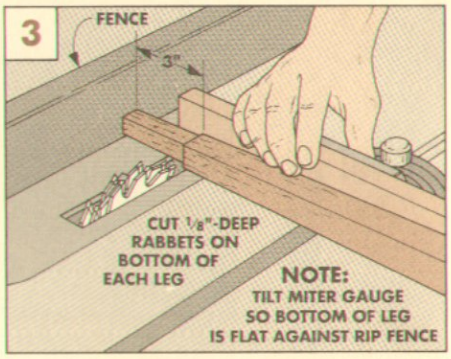

There's a potential problem here. Since the leg is now tapered, if you cut the bottom rabbet with the miter gauge set at 90°, it won't be parallel with the bottom of the leg. What you need to do is tilt the miter gauge so the bottom end of the leg is flat against the side of the rip fence. Then, cut the rabbets as you did for the leg top inlay.

TOP AND BOTTOM INLAY. With the legs rabbeted, walnut inlay pieces can be cut to fit the rabbets. Start by cutting enough stock for sixteen pieces of **leg top inlay (B)** and sixteen pieces of **leg bottom inlay (C)**.

To do this, first resaw the stock so it's as thick as the rabbets are deep (⅛"). Then cut the pieces to fit the rabbeted areas and glue them in place, see Fig. 4.

Note: Since you'll be cutting away the corners of each leg, this inlay doesn't have to extend all the way to the corners — just to the shoulders of the rabbet, see Fig. 5a.

CORNER INLAY. The next step is to rout a ¼" x ¼" rabbet the length of each leg for the leg corner inlay (D), see Fig. 5a. I did this by making two passes on the router table, see Fig. 5. (For more information on this, see Shop Notes, page 17.)

Now cut sixteen **leg corner inlays (D)** to fit the rabbets, see Figs. 6 and 6a. Then, glue the strips to the legs and sand them flush.

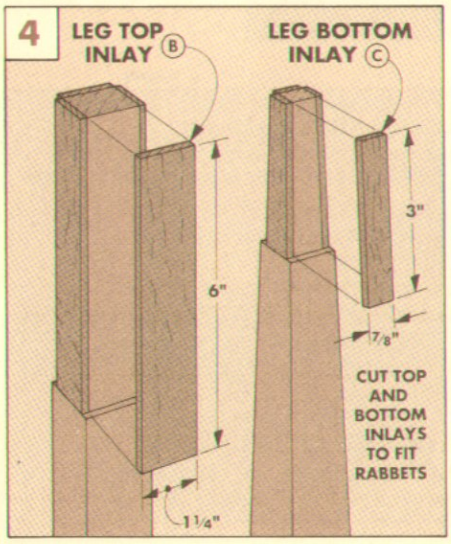

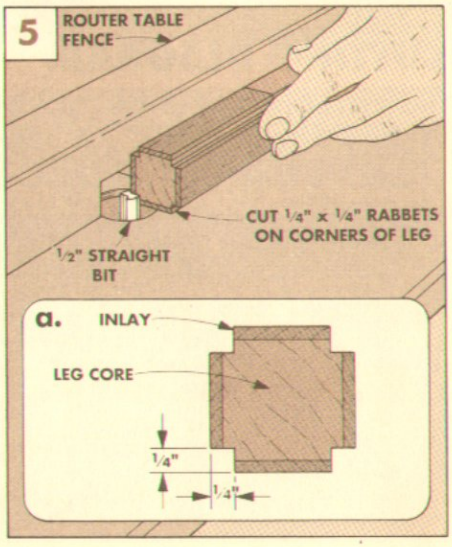

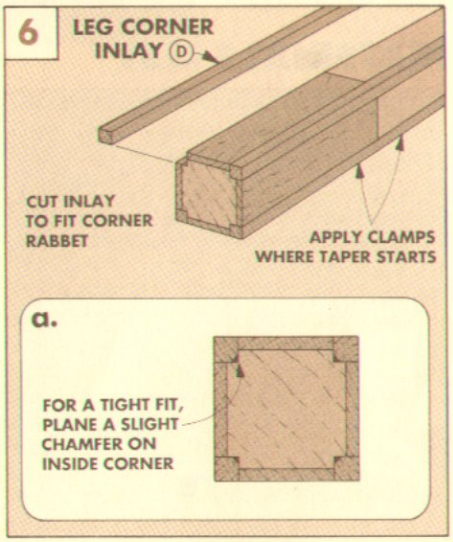

BEADING

There's one more set of trim to add — the decorative beading that softens the transition between the flat section at the top of the legs and the tapered lower section.

ROUT DADOES. The beading fits in shallow dadoes cut near the top of each leg, refer to Fig. 11. I routed these dadoes on the router table, see Fig. 7. You could use a table saw, but the chance of chipout is reduced if you use a router (and you'll get a cleaner cut).

To locate the dadoes, start by positioning the fence on your router table 4⅞" from the *inside* edge of a ¼" straight bit, see Fig. 7a. Then use a board to back up the leg, and rout the dadoes on each leg, see Fig. 7.

CUT BEADING. Once the dadoes are cut, the next step is to make the **beading (E)**. Since the beading is small (¼" x ¼"), it's safest to start with a wide piece and then cut the beading off the edge of the strip.

First rip a strip ¼"thick (Fig. 8), and then use a ⅛" round-over bit on the router table to round over both edges, see Fig. 9. (This produces a ¼" bead.) Now, the beading can be safely cut off the edge of the strip, see Fig. 10. Position the fence to cut a ¼"-wide bead on the waste side of the blade.

MITER BEADING TO LENGTH. After the strips for the beading is cut, the final step is to miter sixteen short pieces to fit in the dadoes on the legs, see Fig. 11. I cut these pieces on a small, shop-built miter box, see box below.

I cut the pieces one at a time and glued them in place. This way I could work on one leg as the beading on another leg was drying. (Note: The beading should fit tight without clamps, but if they're loose, tape them in place until the glue dries.)

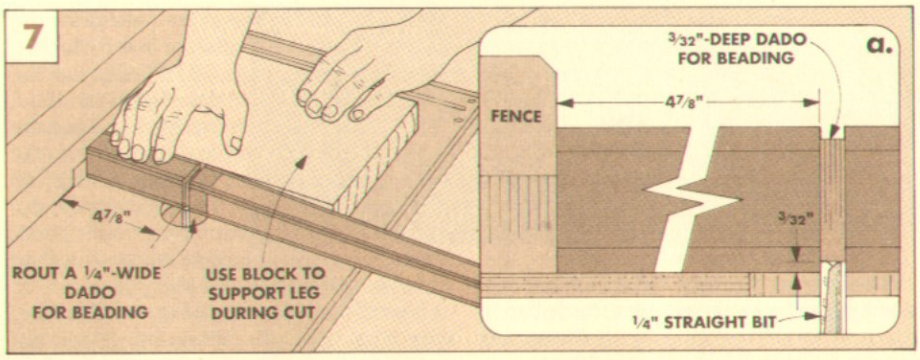

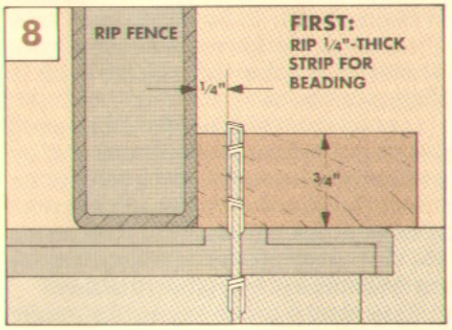

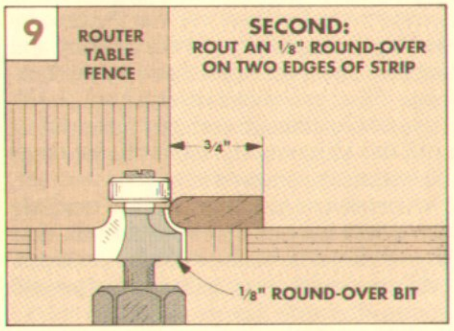

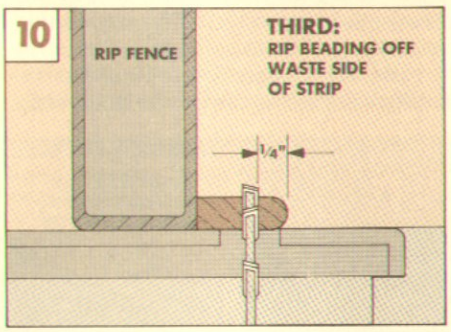

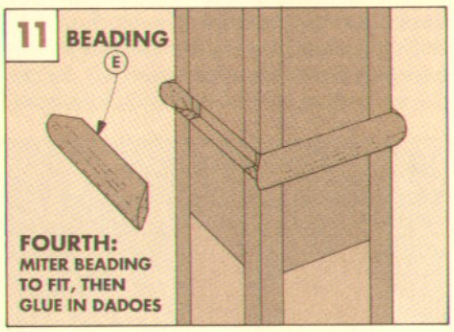

MITERING SMALL PIECES

How do you accurately miter and trim short pieces such as the beading for the legs for the Curved-Front Table? The method I use is to make a miniature miter box with a 45° kerf to guide a hand saw.

MAKE BOX. To make the miter box, start with a scrap of 1½"-thick hardwood, see Fig. 12. Then, cut a centered groove the length of the scrap to hold your workpiece. Next, lay out and cut the 45° kerf with a hand saw.

CUT 45° ON END. You can also trim miters with this miter box. To do this, cut a 45° angle on one end, see Fig. 13. Then position the workpiece so it extends out the angled end and chisel, file, or sand the piece for a perfect fit.

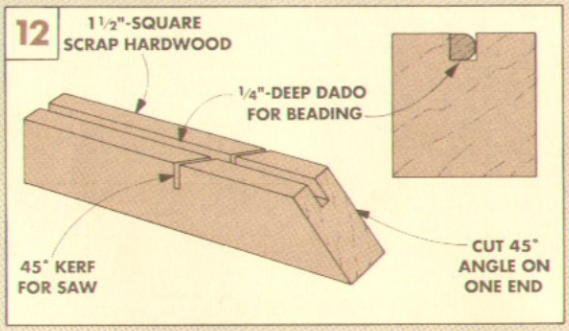

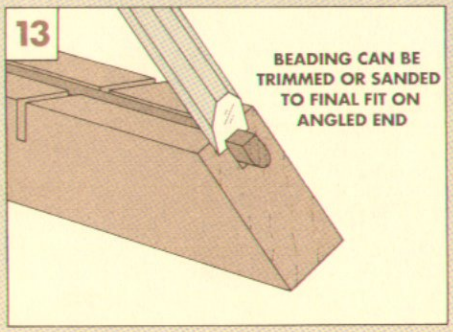

Cutting miters on small pieces is simple if you make a miniature miter box. The workpiece is held by pressing it into a groove cut in the top of the miter box. The end of the miter box is cut at an angle so it can be used for final trimming.

CURVED FRONT CASE

The tapered legs are mounted to a curved case that also acts as a base unit for the aprons. The case consists of two pieces of plywood held together with curved support blocks, refer to photo on the opposite page.

The support blocks are notched to accept the legs, and a series of holes are drilled in the case to aid in clamping on the aprons later, refer to Exploded View, page 19.

TEMPLATE. I started work on the case by making a template to cut the case top and bottom. There are two reasons for this template. First, you only have to lay out one ellipse — even though there are three pieces with this shape on the table (the two case pieces and the finished top).

Second, you can also use the template along with a flush trim or pattern bit (see page 30 for more on these bits) to cut identical forms for the case, and to cut the top and add an inlay strip (see page 25).

To make the template, start by laying out the ellipse dimensions on a piece of ¼"-thick Masonite, see Fig. 14. To allow for the back legs and the inset back piece (J), lay out the centerline of the ellipse 1⅜" from the back edge of the Masonite. Now draw the ellipse. (For a description of how to do this, see Shop Notes, page 16.) Finally, cut the template out and sand the edges smooth.

CASE TOP AND BOTTOM. After making the template, the next step is to cut and trim the **case top and bottom (F)** from ½"-thick fir plywood, see Fig. 14. To do this, trace the outline of the template onto the plywood. Then, rough cut the top and bottom to within ⅛" of the pencil line, see Fig. 14a.

Now the template can be used with a flush trim bit to trim the plywood to match the template. To do this, first tape the template to the blank with double-sided carpet tape. Then, adjust the bit so the bearing rides against the template and trim the blank to shape, see Fig. 15.

LAY OUT NOTCHES. Once the case top and bottom are trimmed, the next step is to lay out four ⅜"-deep notches along the edges to accept the legs. To save time, lay out the notches on the top only. Then tape the top and the bottom together with carpet tape to cut the notches in both pieces together.

To locate the two center notches, make marks on the back edge of the case top, 7" in from each end, see Fig. 16. Then transfer the positions up to the front edge.

Now, hold a leg on the mark and draw the thickness of the leg toward the inside of the top, see Fig. 16.

The notches for the back legs are a little different. They're narrower than the leg so the legs stick out beyond the back of the case pieces. (This allows for the case back that's added later.) So cut these notches ⅛" narrower than the legs, see Fig. 16.

CLAMP HOLES. Since the case top and bottom are used to support the curved aprons, I drilled a series of holes in both pieces to be able to clamp the aprons in place. To do this, lay out and drill twelve holes, see Fig. 16. (I used a 1½"-dia. bit, but this can vary depending of the size of clamps you use.)

SUPPORT BLOCKS. Once the clamp holes are drilled, work can begin on the **support blocks (G)**. These blocks act as spacers between the case top and bottom, and also as screw blocks for the legs, refer to Figs. 19 and 20 on the opposite page.

Make the support blocks by ripping a piece of standard 2x4 to 3" wide. Then cut off four 6"-long blocks.

Next, center two blocks under each of the middle leg notches that are laid out on the case. The other two blocks are positioned flush with the back edge for the rear leg notches, see Fig. 17.

Now, trace the outline of the plywood case onto the blanks and cut out the support blocks along this line.

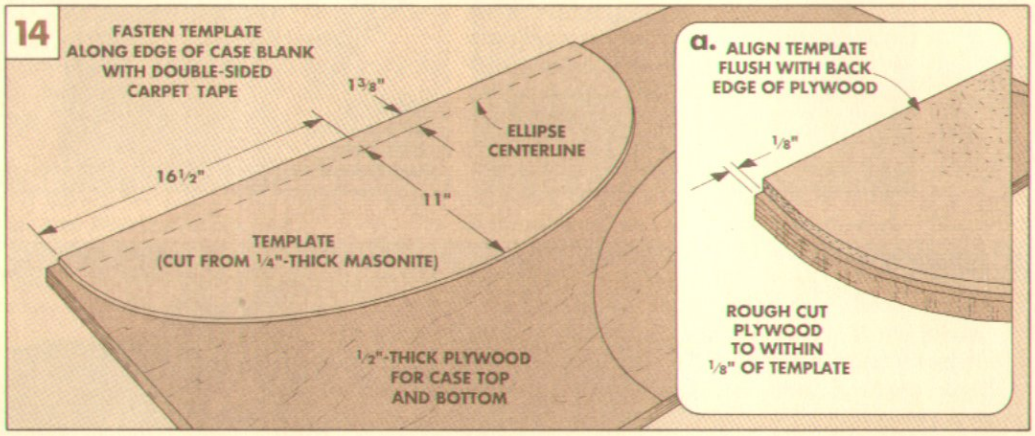

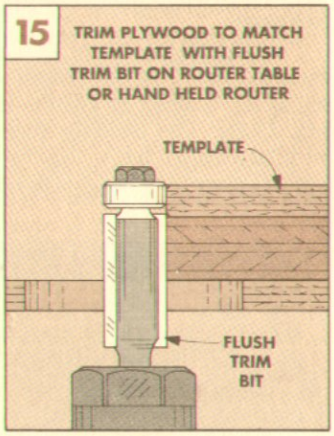

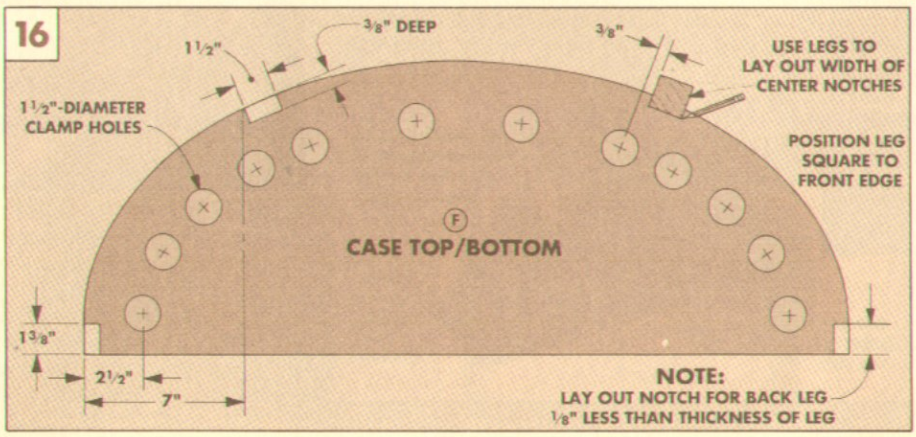

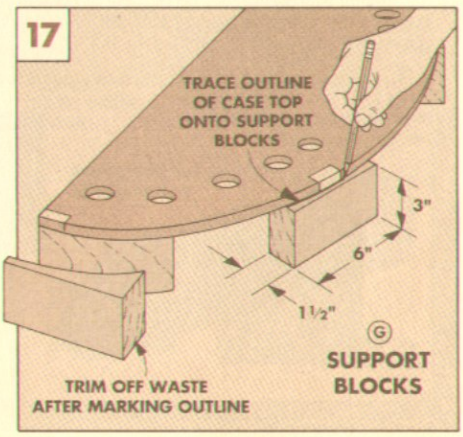

CASE CONTINUED

After the support blocks have been cut to match the curve of the case top and bottom, they can be screwed in place.

Since the apron (that's added later) is glued only to the plywood top and bottom, I set the support blocks back 1/8" from the front edge. This won't affect the support the blocks provide to the legs though — they will be notched along with the plywood top and bottom to accept the legs.

ASSEMBLE CASE. Assembly of the case begins by screwing the support blocks one at a time to the bottom of the case.

To do this, center a support block on a notch and set it back 1/8", see Fig. 18. Now clamp the block in place and screw it to the plywood. Note: I used two flathead screws for each support block, and countersunk them into the plywood so the table top (that's added later) will sit flat on the case top.

After all four blocks are screwed to the bottom, the top of the case can be attached. Screwing it to the blocks is easy — but getting the top and bottom aligned with each other is not so easy. If the case top and bottom aren't square and aligned to each other, the aprons won't be square to the table top when they're glued on later.

To attach the top of the case, start by placing the assembly on edge with the back edge resting on a flat surface, see Fig. 19. Then, use a try square to align one end of the case. Once the top and bottom are aligned, clamp them together. Then, slide the square slowly up the curved case, checking to make sure the two pieces are square with each other.

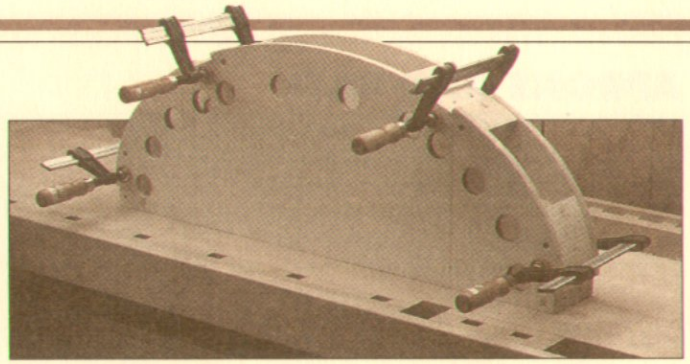

If they're not square at each support block, you can shift the top or the bottom of the case to bring them into square. When they're clamped square, screw the top of the case to the support blocks.

CUT NOTCHES. After the case is screwed together, the notches can be cut to fit the legs, see Figs. 20 and 21.

I cut these notches on the band saw by cutting the sides of the notch first and then removing the waste with a series of cuts. You could also use a hand saw to cut the sides, and a chisel to remove the waste.

But whichever method you use, it's very important that the back of each notch be parallel to the front edge of the case. If it's not, the leg won't be perpendicular to the top of the table. This can cause two problems.

First, the legs can twist and won't be parallel to each other. Second, the aprons which are added later, won't butt up against the legs squarely. So, check the notches often as you cut them.

ATTACH LEGS. Once the notches are cut, the next step is to screw the legs to the case. To do this, start by drilling a shank hole centered through the *front* of each support block, see Figs. 20 and 21.

The next step is to locate a pilot hole in each leg. To make it easier to do this, turn the case upside down and place it on a flat surface. Then insert a leg in a notch and hold it in place. Next, reach through the back of the case and push an awl or brad-point bit through the shank hole so it leaves a mark on the leg.

After marking each leg, drill a pilot hole in the back of each leg. Finally, spread glue in the notches and on the back of the legs, and screw the legs to the case, making sure they're perpendicular to the case.

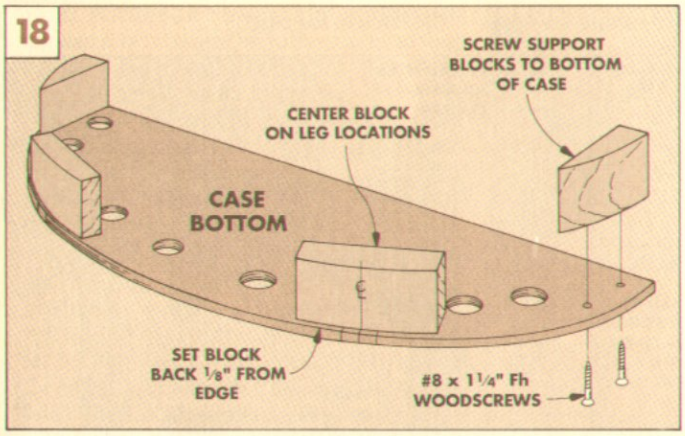

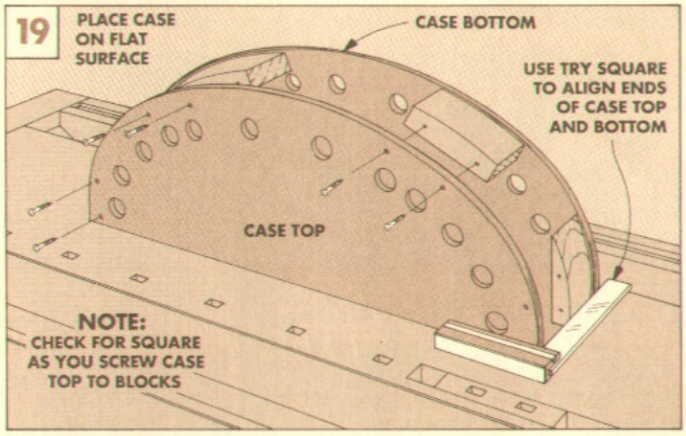

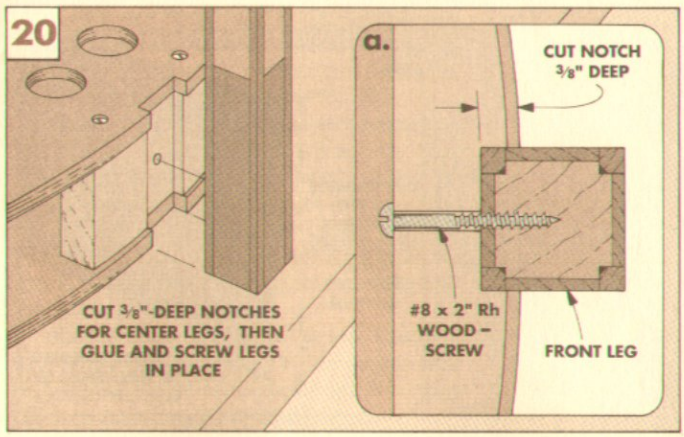

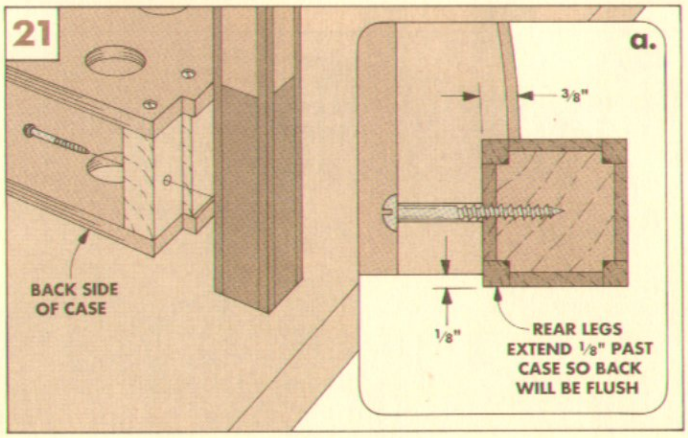

APRONS AND BACK

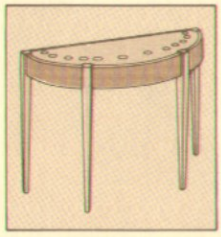

At this point the legs are screwed to the case. The next step is to add the apron to the curved front. The apron is made from a single strip of ¾"-thick cherry plywood that's cut into three sections to fit between the legs.

APRON. Begin work on the **apron (H)** by cutting a 4"-wide, 48"-long strip of cherry plywood. (Note: The face grain of the plywood should run the length of the strip.)

Before cutting the apron into sections, I added an **apron inlay (I)** strip for appearance. To do this, rout a ¼"-wide rabbet along the bottom edge, see Fig. 22. Then cut the inlay strip to fit the rabbet. After it's glued in place, sand the inlay flush with the apron.

CUT SECTIONS. Now the apron can be cut into three sections. To determine the rough length of each section, run a tape measure between the legs along the curved case. Then, to allow for the thickness of the plywood and for trimming later, add 1½" to each measurement.

Now cut the strip into three sections. (I cut the two end sections 14" long and the middle section 18" long.)

KERF AND FIT APRON. The next step is to kerf and fit the apron sections. I started by cutting kerfs in each section, spacing them every ¼", see Fig. 22b. (For more on kerfing, see page 12.)

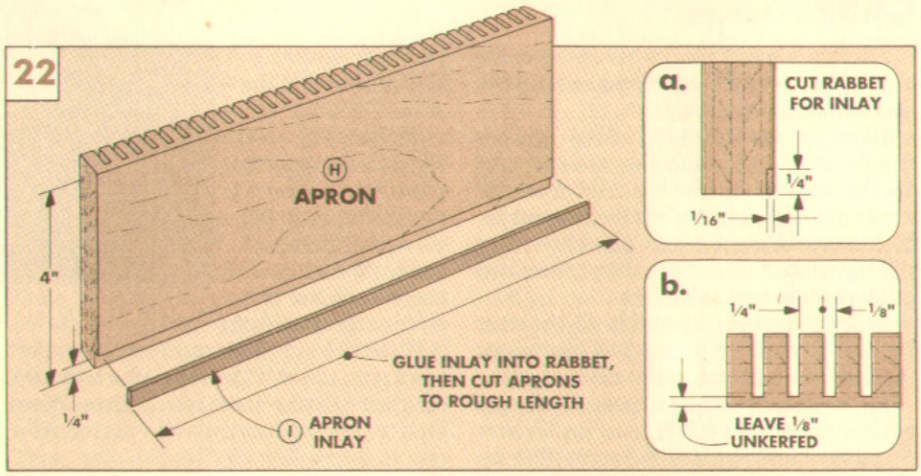

To make it easier to fit the aprons between the legs, I cut a 10° bevel on one end of each apron, see Fig. 23a. Then to get an idea of the final length, curl the apron around the edge of the case and make a mark where the unbeveled end meets the leg, see Fig. 23. Now cut this end at 10° at the mark. Sneak up on the final length by taking very light cuts until the apron just fits between the legs.

After fitting all three apron sections between the legs, they can be glued and clamped to the case, see Fig. 24. I added clamping strips to protect the apron and distribute the pressure evenly along the edge.

BACK. The next step is to add the back. To determine the length of the back, measure the inside distance between the rear legs, see Fig. 25. Then measure the height (thickness) of the case to determine the width of the back. Finally, cut the **back (J)** to size.

RABBET EDGES. Since the legs protrude ⅛" from the back of the case, you need to cut a rabbet that leaves a ⅛"-thick tongue on the edges of the back. Cut the rabbets on the ends to match the width of the rear support blocks, see Fig. 25a.

Then cut rabbets along the top and bottom edges of the back (J) to match the thickness of the plywood in the case (½"). Finally, glue the back to the case.

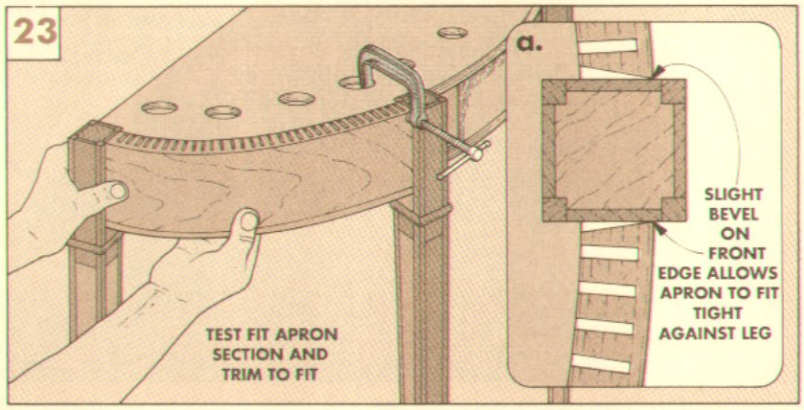

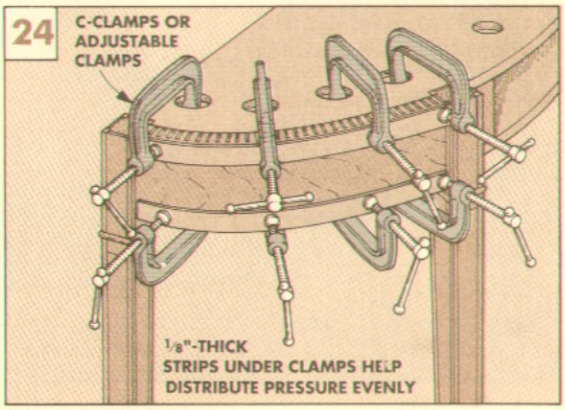

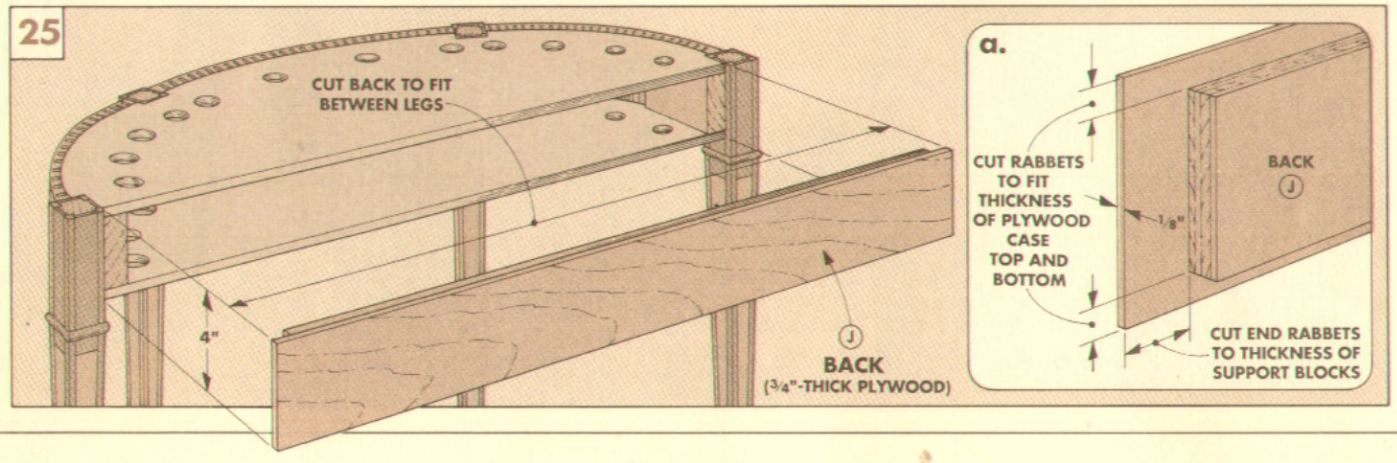

TABLE TOP

The last step is to add the table top. I made the top out of cherry plywood, and covered the plywood edges with strips of walnut. For an accent, I also added an inlay strip of walnut along the perimeter of the top.

TOP BLANK. Start work on the **top (K)**, by cutting a blank of ¾"-thick plywood, see Fig. 26. This blank is cut into a half-oval shape so it will overhang the case by 1½".

To do this, you could make a new template that's 1½" larger than the one used for making the case. But there's an easier way — just enlarge the size of the original template onto the plywood blank by using a compass, see Fig. 26. Now rough cut the top ⅛" outside of the pencil line.

That's great for getting the top to rough shape. But how do you use a router to trim the top to final shape without a new template? Simple. Use a pilot strip to position the bit the correct distance from the template, see Fig. 26a. (For more on this, see Shop Notes, page 17.)

CUT GROOVE FOR INLAY. Once you've trimmed the top, the next step is to cut a groove for a **top inlay strip (L)**, see Fig. 27. To do this, I clamped the template to the top again. But this time mount a ⅝" guide bushing and a ⅛" straight bit in the router to rout a groove in the top, see Fig. 27a. (For more on guide bushings, see page 31.)

INLAY. After routing the groove, an inlay strip of walnut can be cut to fit. At the same time, I cut the strips for the **back trim (M)** and **front trim (N)** since they're all the same thickness (⅛").

Rip the top inlay to ¼"-wide and glue it into the groove, see Step 1 in Fig. 28. (Note: To make it easier to glue the inlay in place, you may want to plane a slight bevel on each face of the inlay.) When the glue dries, trim the inlay flush with the top, (see box at bottom right for more on this).

TRIM. The next step is to glue on the back trim (M), see Step 2 in Fig. 28. (I used tape to hold the strip in place.) When the glue is dry, cut the trim flush with the ends of the top. Then, glue on the front trim (N).

ATTACH TOP. Now the top can be attached to the case. Since both the top and the case are made from plywood (which won't expand or contract with changes in humidity), I simply glued the top to the case.

To do this, position the top flush with the back, and so it overhangs an equal amount on both ends, see Fig. 29.

FINISH. After attaching the top, I sanded the entire table and then wiped on one coat of General Finishes' Sealacell and two coats of their satin Royal Finish top coat.

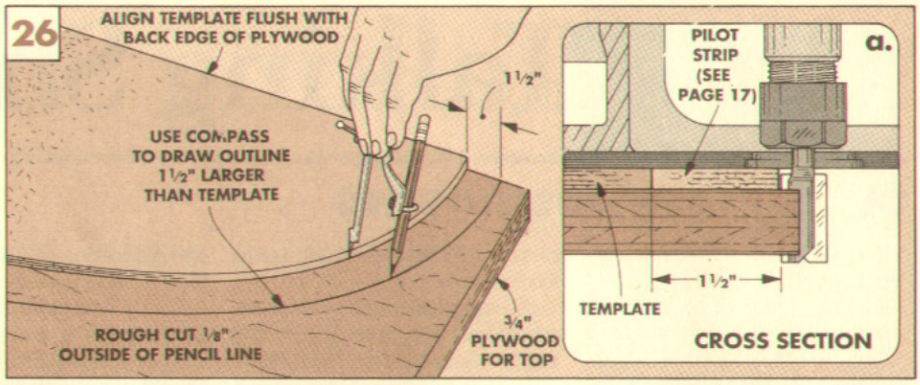

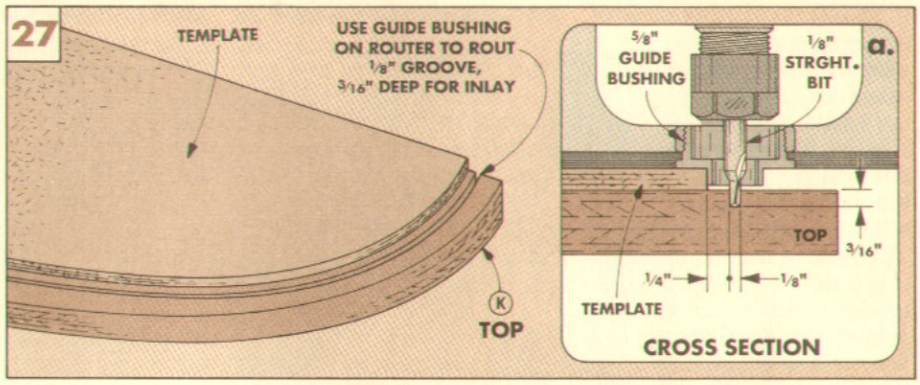

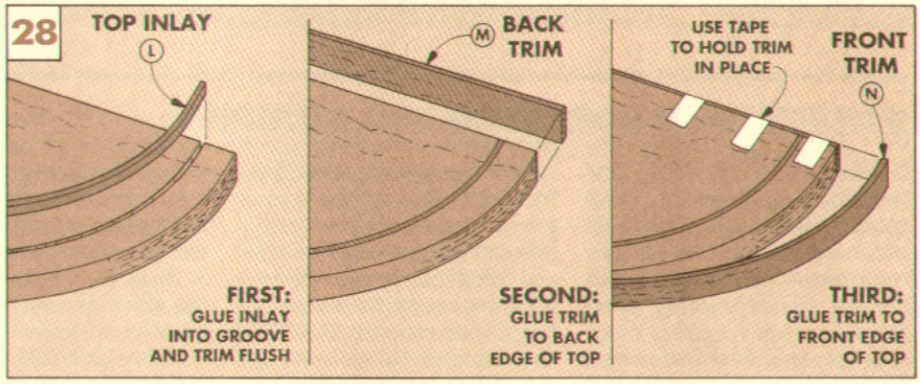

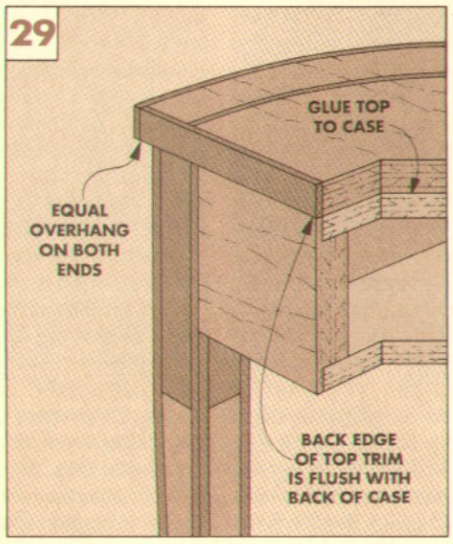

TRIMMING INLAY

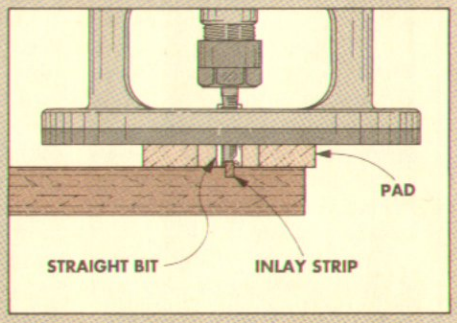

To trim inlay without chipout, tape a pair of pads onto the router base with carpet tape. Then adjust a straight bit so it's flush with the surface, and rout the inlay flush.

Talking Shop

GUIDE BLOCK POSITIONING

■ *In previous issues of* Woodsmith *you've shown a method for resawing wood on the band saw using a block clamped alongside the blade. But I'm not sure how to position it. Should the block be ahead of, directly in line with, or behind the saw blade?*

W. A. Theisen
Loyal, Wisconsin

A V-shaped guide block serves two different purposes when you're resawing stock on the band saw, see Fig. 1.

First, like the rip fence on a table saw, the position of the block will determine the thickness of the wood that's cut.

At the same time, it allows you to guide the workpiece past the blade — with one important difference from a rip fence. Since it's V-shaped, you can pivot the workpiece as it's fed into the blade. This lets you compensate for blade lead (when a blade cuts to one side).

BLOCK POSITION. The guide block should be positioned about 1/16" *ahead* of the front point of the teeth. This way the block provides a starting point when you first feed the work into the blade, see Fig. 1a.

The one thing you don't want to do is position the guide *behind* the saw blade. For the guide block to be effective it should guide the wood as it's being cut — not afterwards.

Also, if the guide block is positioned behind the blade, and you try to pivot the workpiece to compensate for blade lead, the wood will bind between the blade and the guide block.

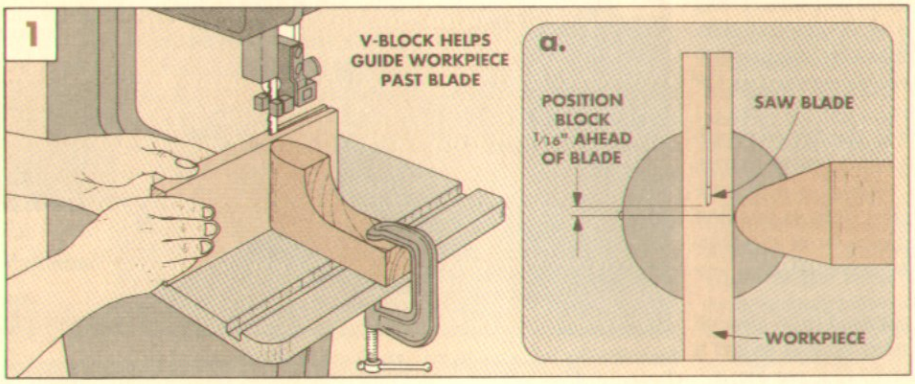

GUIDELINES FOR STORING LUMBER

■ *Since I need to build some lumber storage racks in my shop, I'm looking forward to the results of the wood storage contest announced in* Woodsmith *No. 74. I'm especially interested in ways to store small amounts of lumber and scraps. Lots of books tell how to store hundreds of board feet, but no one says what to do with the short stuff. Any ideas?*

Greg Scherer
Long Lake, Minnesota

The results of the wood storage contest on pages 28 and 29 of this issue will give you some specific ideas on how to store small (or large) amounts of wood. In addition, here are some general guidelines.

Small amounts of dry lumber are best stored just the way most of us do it — in fairly neat piles.

KEEP OFF FLOOR. Probably the most important thing you can do with scraps and small pieces of stock is to keep them off the floor, especially a concrete basement or garage floor. It may look flat and dry, but concrete is moist and porous. Moisture can pass through concrete and "wick" into your lumber.

Under damp or wet conditions, wood can warp. And if left long enough, damp wood can rot. So I always make a point of stacking wood high enough off the floor to allow air to move freely underneath.

There's no need to "sticker" these small amounts as is done when air drying or kiln drying wood. ("Stickering" is the term used for stacking lumber with sticks or strips of wood carefully spaced between each board.)

Stickering increases the air movement around the boards — a good thing for green wood, but not necessary once it's been dried. Besides, it's a lot of trouble to do it right with small scraps of lumber, and stickered wood takes up a lot more space.

ATTICS ARE DRY. Attics and lofts are often good dry places to store wood. But you might have a problem if the attic is a lot drier than your shop. When you take the wood down and start to use it, it can expand as it adjusts to the extra moisture in its new, more humid environment.

This is much like the problem of bringing wood home from the lumber yard and starting to work with it right away. Sometimes conditions in the lumber yard are very different from your shop. No matter where you get your lumber, it's always best to let it adjust to the conditions of your shop for several days before working with it.

LUMBER RACKS. If you're going to build a wall rack that stores lumber horizontally, or stack lumber on blocks on the floor, be sure the boards are well-supported along their length. To prevent boards from distorting from the weight of wood piled on top, I'd recommend that you space brackets or supports no more than 32" apart.

STORAGE BOXES. For short pieces of wood, you might try storing them on end in a box. This takes up less space and you can tell at a glance how long the individual pieces are. Then you won't have to sort through the pile to find one the right length.

STORING PLYWOOD. Plywood usually gets stacked on edge — it takes up a lot less space that way. I try to make it stand up as close to vertical as possible (and off the floor, too). Too much lean can bend it, especially if other sheets are stacked with it. And if it's left that way long enough, it may not flatten out again.

Of course, you can store plywood flat, but it does take up more space. To avoid distortion, be sure it's well-supported.

MARK SIZES. One other suggestion. I make a point of writing the type and size on the end grain of each piece of wood and plywood. This saves a lot of time when searching for a piece to fit a particular need.

PROBLEM? QUESTION?

Solving a problem (or avoiding one in the first place) is part of every project. But the best solutions aren't always obvious — they often come from one who's faced the problem before.

If you have a problem, solution, question, or even a gripe, maybe we (or another reader) can help. Just write to *Woodsmith*, Talking Shop, 2200 Grand Avenue, Des Moines, Iowa 50312

SLOW-SETTING GLUE

■ *Some of the more complicated projects I build have a lot of assembly that must be done at one time. But when I use yellow woodworkers' glue, it sets up before I can get all the parts together. Is there a slower setting glue that has the strength of yellow glue?*

Melvin Williams
Mishawaka, Indiana

There are a couple of glues you can use in this situation. Whenever we have problems getting a complicated glue job together quickly, we usually switch from yellow woodworkers' glue (such as Titebond or Elmer's Carpenters' glue) to a white all-purpose glue (such as Elmer's Glue-All).

Another option would be to use a hide glue or a powdered plastic (urea-formaldehyde) resin glue. Both of these glues set up slower than yellow glue and are just as strong. (Hide glue and plastic resin glue are available at most hardware stores.)

Garrett Wade (161 Ave. of the Americas, New York, NY 10012; 800–221–2942) sells a "Slo-Set" glue that gives you more working time (20 to 30 minutes), but still achieves 75% of its strength after clamping for 30 minutes.

DILUTE GLUE. The other thing you can do is thin Titebond yellow glue with about 5% water (one part water to twenty parts glue), explained Dennis Doyle of the Consumer Products Lab for Franklin Industries, manufacturer of Titebond glue. That will slow the set time about 50%.

When I asked Dennis if this would affect the strength, he said, "It won't have any significant effect on the strength of the glue joint as long as you don't mix in more than 5% water."

A TEST. To test this, I glued up three sets of boards. The first set didn't have any water mixed in with the glue. The second set had 5% water, and the third set had 10% water. I didn't stick the boards together right away but let them sit open.

As expected, the first board got tacky within minutes. The second board took a few minutes longer. And the glue on the third board was too thin and runny.

After the glue joints were put together and allowed to dry, I broke the joints apart. The 10% board broke at the glue line, but the other two pulled splinters from both sides of the glue line.

That's the sign of a good glue joint — one where the glue is stronger than the surrounding wood fibers.

RIGHT SIDE OR LEFT SIDE?

■ *Every picture I've seen of a table saw in use shows the workpiece on the right of the blade (left of the rip fence). I habitually position the workpiece to the left of the blade, using my left hand or a push stick. Is this a harmless idiosyncracy or should I mend my ways?*

Gil Strubel
Cherry Hill, New Jersey

I don't see any problem with working to the left of the blade. You should do whatever feels comfortable and safe for *you*.

Right-handed woodworkers usually feel more comfortable working with the stock to the right of the blade (and left of the fence) because they can use their right arm to better control the workpiece, see Fig. 1.

And most left-handed woodworkers I know learn to work right-handed. That is, to the right of the blade. But some are more comfortable working to the left of the blade, see Fig. 2.

Safety Note: If you can't switch hands comfortably, *don't* reach over the fence or across the blade with the opposite hand, see Fig. 3. You won't be able to safely see the blade at all times. And at the same time, you won't be putting enough pressure against the fence as the workpiece is pushed through.

ONE PROBLEM. The only disadvantage I see to working to the left of the blade is that the majority of table saw rip fences (including many after-market fence systems) are designed to move farther to the right than the left.

This means you won't be able to cut as wide a board to the left as to the right of the blade.

Also, if the front guide rail for your rip fence has a measuring tape attached to it, the tape probably reads from left-to-right — and may not be reversible.

Regardless of which side of the rip fence you use, *don't* stand directly behind the workpiece as you rip on the table saw. If a workpiece should ever bind between the blade and the fence, it may be thrown back and could cause a serious injury.

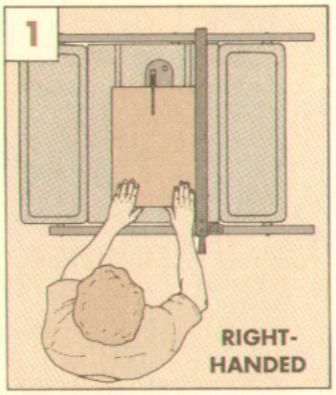

Most right-handed workers position the rip fence to the right of the blade. This way they can stand to one side and safely guide the work through the cut.

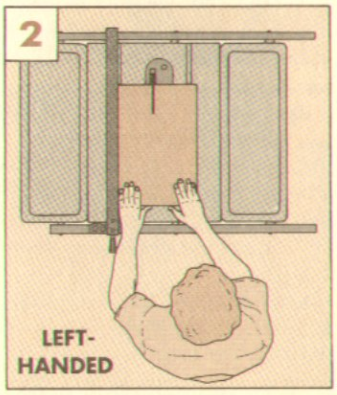

Some left-handed workers position the fence to the left of the saw blade. But this can limit the width of cut since most fence rails extend farther to the right.

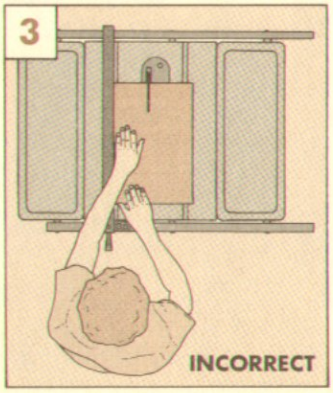

If you do place the fence to the left of the blade, don't reach over with your right hand to push the piece through. You may not see the blade at all times.

Wood Storage

When the tips started coming in for our wood storage contest, it was obvious that almost every woodworker has differing storage needs — usually dependent on their interests and the size of their shops. With that in mind, we looked for ideas that were adaptable to many situations.

TWO-PART SYSTEM. Our favorite was the design sent in by **Richard Schilling** of Falmouth, Maine. It's a two-part system that stores boards on shelf brackets suspended from the ceiling, and a rolling cart for plywood that parks behind the shelf posts, see Fig. 1.

SHELVING UNIT. The shelving unit is built from pairs of 2x4's for the posts, and brackets cut from 2x6's.

The shelf brackets are cut to length first, with the bottom brackets 27½" long, and all others 23½". Then the bottom edge of each bracket is tapered to a triangular shape, see Fig. 3.

The brackets are mounted to the posts by cutting tenons on the back edge. (Just cut a shallow rabbet on both sides of the brackets, see Fig. 3.)

The tenons fit into mortises in the posts. However, instead of chopping out mortises, it's easier to cut matching dadoes in pairs of 2x4's for the posts, see Fig. 2. Then glue a pair of 2x4's together to create the mortises for the brackets.

The brackets can be glued into the mortises, or pinned with removable dowels.

PLYWOOD CART. To store plywood, a rolling cart is built to fit behind the posts.

The plywood cart is made from eight 2x4's, see Fig. 4. The cart is designed so large sheets lean against the angled outside braces, while the smaller pieces fit between the braces.

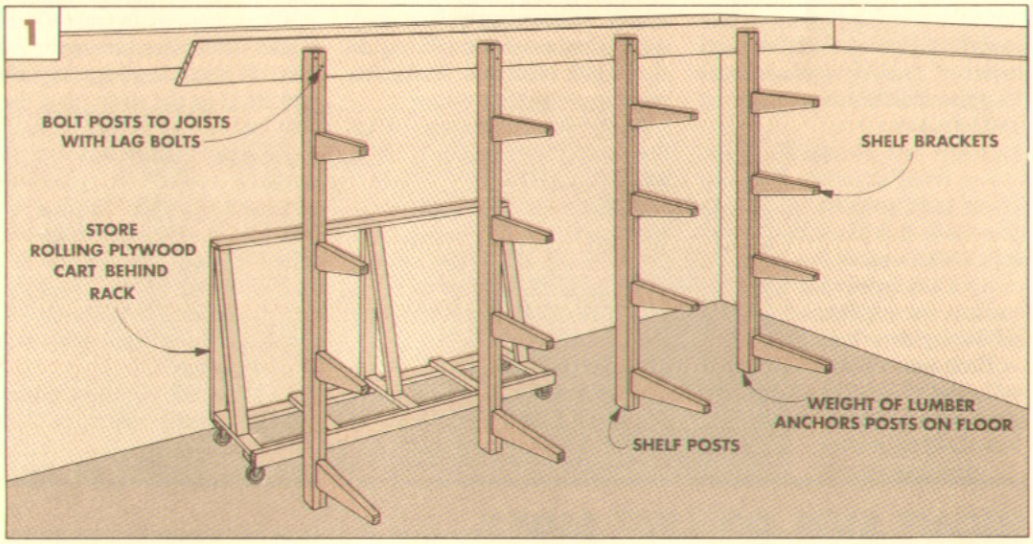

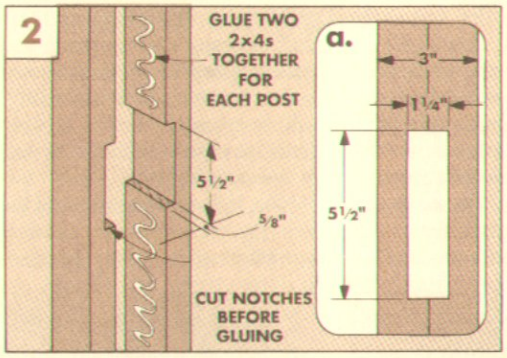

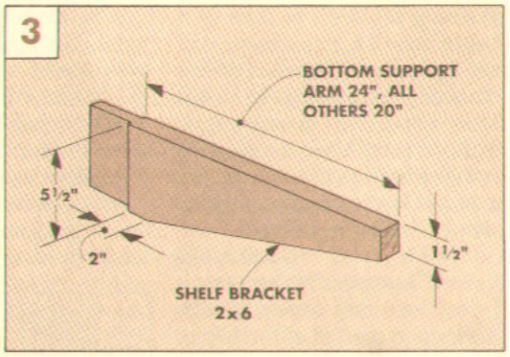

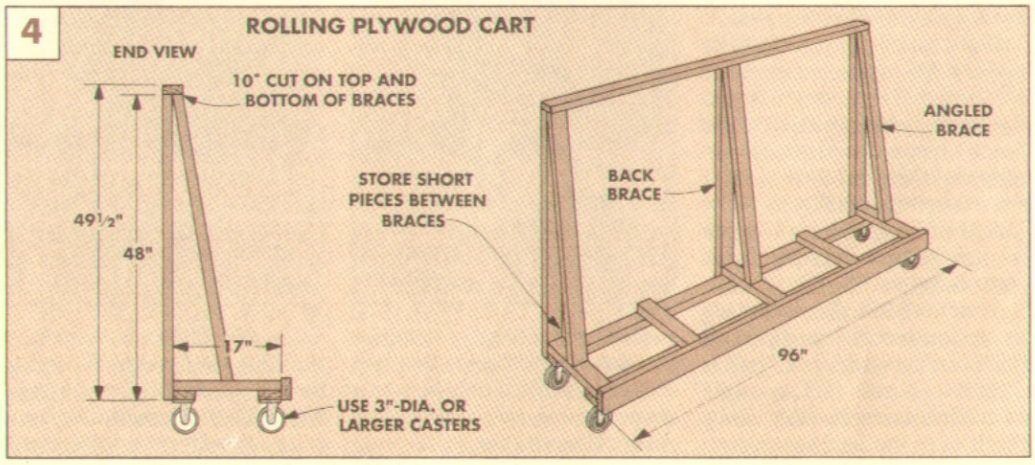

$100 CONTEST

SHOP-MADE CLAMPS

What do you do if you don't have enough clamps or can't find the right kind of clamps for a project? Make your own. If you have plans or ideas for shop-made clamps, tell us about them.

We'll publish the best shop-made clamp designs in an upcoming issue of *Woodsmith*. Winners will receive $100 and a *Woodsmith* Master Try Square. Duplicate or similar entries will be considered in the order we receive them. Send your ideas (postmarked by November 1, 1991) to *Woodsmith*, Shop Tips Contest, 2200 Grand Ave., Des Moines, Iowa 50312.

PLYWOOD RACK

■ Sorting through sheets of plywood leaning on edge against a wall can be difficult. You have to hold up the sheets in front to get at those behind. By the time you get three or four sheets into the pile, you're holding quite a load.

Vin Braica of Enfield, Connecticut solved this problem by building a rack that holds up the front sheets as you search behind, see Fig. 1. And he can load and remove panels easily.

What makes this rack unique is the rack support attached to the hinged gate, see Fig. 1a. With the gate held open by the rack support, sheets in front lean against the gate as you sort through the sheets behind. And the rack support folds against the gate when the rack is closed.

The gate is held in the closed position by two arms that are hinged to a mounting bracket on the wall, see Fig. 1. The arms lock onto the gate with pinned slip-tenon joints. To open the rack, remove the pin (a bolt) and push the arm up against the wall.

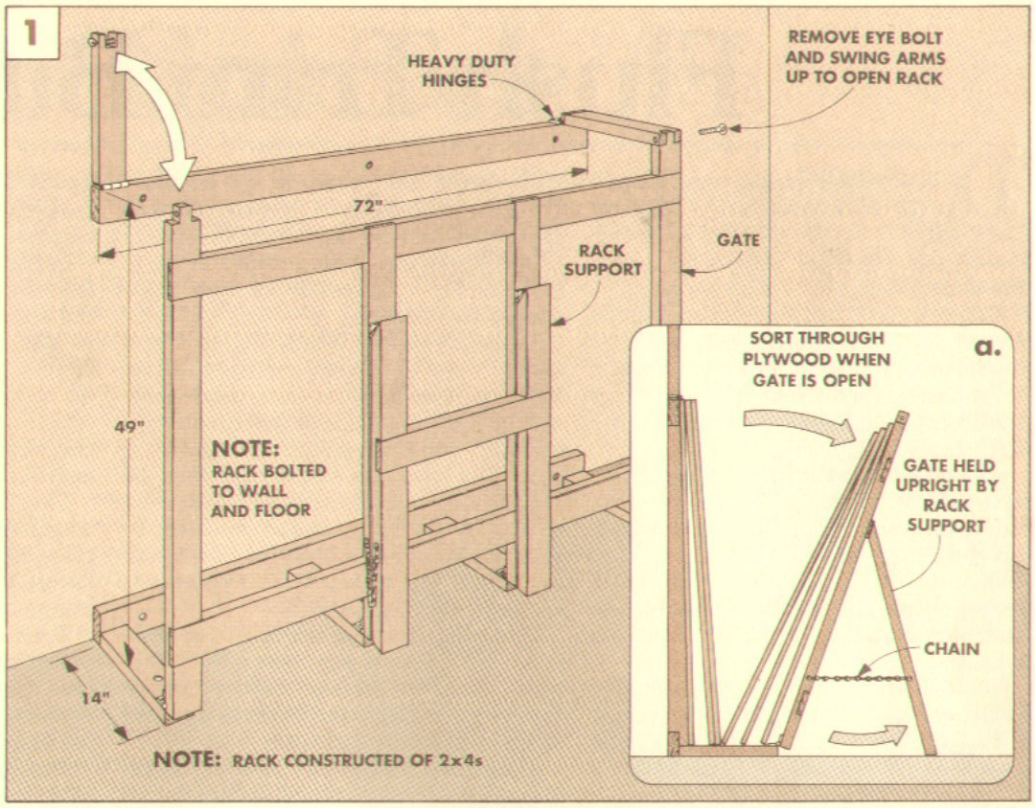

BUNGEE CORDS

■ Storing lumber and plywood on end against a wall or between studs saves space — but how can you keep them from falling over without building a big rack? **Stephen A. Jorgensen** of Grand Prairie, Texas uses bungee cords.

Since his shop is in his garage, floor space is at a premium. So he built a "rack" of 1x4 pine boards anchored horizontally to the wall with counterbored lag bolts, see Fig. 1a.

Next, to keep the boards organized in neat vertical piles, he glued 5/8"-diameter dowels at intervals into the 1x4's, see Fig. 1a. Then he installed eyelets for the bungee cords to hook on.

Bungee cords are available in many different lengths at hardware and outdoor supply stores. Get cords that are about 25% shorter than the distance between eyelets when loose. This way, they'll be tight between the eyelets and hold lots of wood.

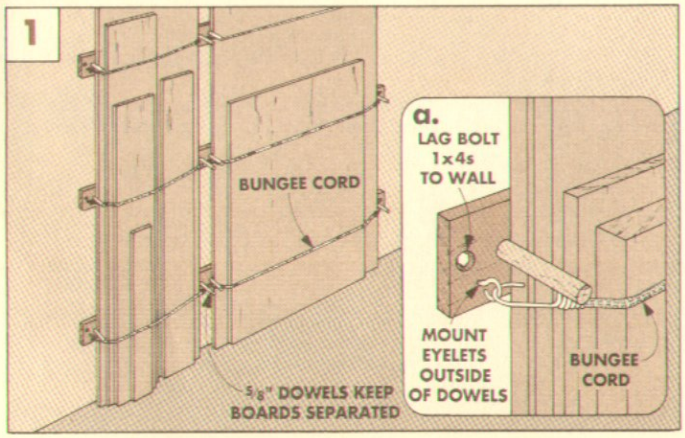

SPRING POLE

■ Here's another good way to keep plywood stacked neatly against a wall — use a spring pole, see Fig. 1. **Andre Camire** of New Bedford, Massachusetts uses this method to hold sheets of plywood in his wall storage rack.

Andre's spring poles are made from two pieces of conduit, one with an outside diameter just small enough so it fits inside the other. The larger piece is plugged about a quarter of the way down from the top and a spring is dropped in, see Fig. 1a. The smaller diameter conduit (you could use a dowel instead) slides into the bottom piece and stops against the spring.

To use the spring pole, the spring is compressed so the pole is short enough to fit between two brackets mounted horizontally from a wall, post, or stud, see Fig. 1. Then the ends of the pole are set into corresponding holes in the upper and lower brackets. When released, the spring tension locks the pole between the brackets.

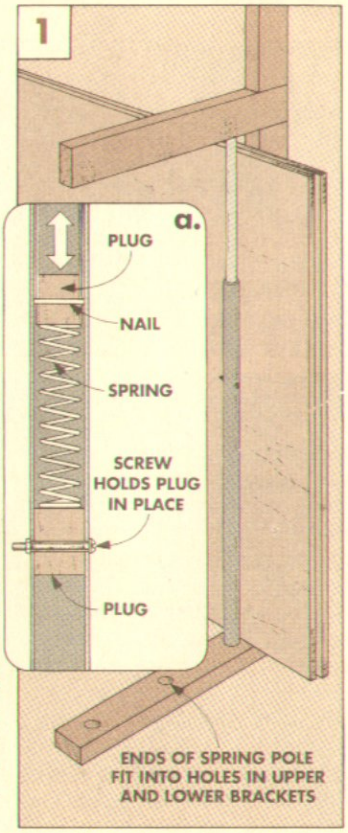

Flush Trim Bits

The key to using a router to cut shapes, like the arched case on the Tambour Clock (page 6) or the top of the Curved-Front Table (page 18), isn't in the router. The secret is in the bit — a flush trim bit.

A flush trim bit has a cutting edge that's aligned (flush) with a ball bearing guide on the end of the bit, see bit on the left in photo. As the bearing runs along a template, the bit cuts the edge of an adjacent workpiece to the exact same shape, see Fig. 1.

FOLLOWING A TEMPLATE. It's the perfect bit to use with templates. If you cut the template to the desired shape, you can duplicate that shape any number of times.

To do this, first cut out the template to the desired shape. Then lay the template on the workpiece and draw a pencil line around the template onto the workpiece.

Now use a band saw or sabre saw to cut out the workpiece about 1/8" to the waste side of the line. Next, attach the template to the workpiece. (I use double-sided carpet tape.)

To trim the workpiece to final size, mount a flush trim bit in the router or router table and raise the bit so the ball bearing will run against the template, see Fig. 1. Then, as you rout, the cutting edge will trim the workpiece to the same shape as the template. (Note: If you use a hand-held router, the template will have to be fastened to the *bottom* of the workpiece. With a router table, as shown in Fig. 1, the template is mounted on *top* of the workpiece.)

GUIDE BUSHINGS? Why do I need a flush trim bit? Can't I just use a straight bit and follow the template with a router guide bushing? You can — but this can get confusing.

To determine the size of the template, you have to measure the distance between the outside edge of the bushing and the cutting edge of the bit. Then subtract this distance from the desired size of the workpiece to find the size of the template. (This process is shown in Fig. 27 on page 25.)

That's the advantage of a flush trim bit — it will cut the *exact* same size as your template. Whatever size and shape you make the template, that's the identical size and shape of your final workpiece.

TRIMMING LAMINATES AND VENEERS. Though I like to use a flush trim bit to follow a template, they're also commonly used to trim plastic laminates (such as on kitchen countertops) and veneers. After an oversized piece of laminate or veneer is glued to a substrate like plywood or particleboard, a flush trim bit can be used to trim the laminate perfectly flush with the substrate.

PATTERN BIT. Flush trim bits are great for following templates or trimming laminates. But what if you want to plunge the flush trim bit into the center of a workpiece to rout a mortise or form a recess for an inlay? Won't the bearing get in the way? Yes. Then it's time to consider a slightly different bit — a pattern bit. (See opposite page for sources of both flush trim bits and pattern bits.)

The ball bearing on a pattern bit is mounted on the *shaft* rather than on the *end* of the bit, see bit on the right in photo. With the bearing on the shaft, a pattern bit can be plunged into a workpiece, see Fig. 2.

There's one thing you do have to take into consideration when plunging with a pattern bit — the depth of cut. For a shallow mortise or recess, you have to add a spacer between the template and the workpiece, see Fig. 2.

Pattern bits can also be used like conventional flush trim bits to trim outside edges to the same shape as a template, see Fig. 3. But I usually use a pattern bit in a hand-held router only. On a router table, it's safer to use a flush trim bit with the bearing on the end.

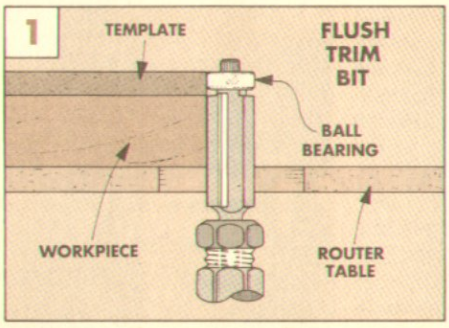

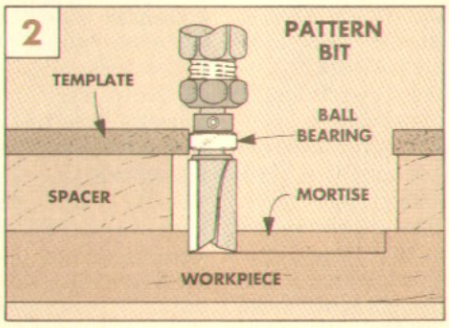

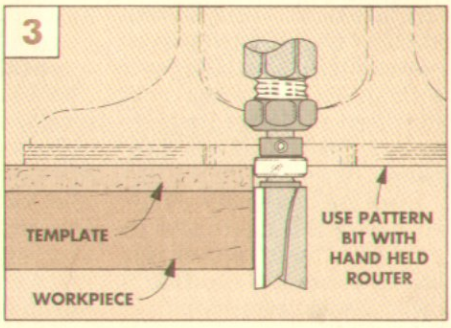

SHOP-MADE PATTERN BIT

If you don't have a flush trim or pattern bit, it's still possible to rout shapes using the technique explained above. You can convert a straight bit to work like a pattern bit — just add a ball bearing guide and retaining collar, see drawing at right and Sources, page 31.

To convert a straight bit into a pattern bit use a ball bearing with an *inside* diameter that matches the shaft of the straight bit, and an *outside* diameter the same as the cutting diameter of the straight bit. Then, to keep the bearing from sliding on the shaft while you're routing, a retaining collar with a set screw fits on the shaft behind the bearing.

There are a couple things to keep in mind when using a converted straight bit for pattern routing. First, a straight bit can measure a few thousandths of an inch *larger* than its nominal diameter (to allow for sharpening). Also, there's a larger fillet on a straight bit than on a pattern bit (see drawing).

So to prevent the larger-diameter cutters from routing into the template, keep the template separated from the workpiece by a spacer, refer to Fig. 2, above. And if your workpiece is thicker than the bit is long, rout the pattern in several passes — just reduce the thickness of the spacers between cuts.

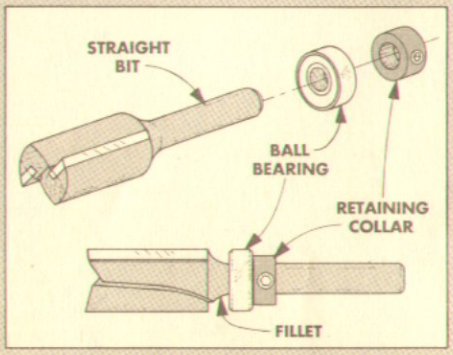

Sources

TAMBOUR CLOCK

Woodsmith Project Supplies is offering quartz (battery-operated) and keywind movement kits for the Tambour Clock shown on page 6. Both kits include the hardware to build the clock and a pattern of the template to make the front and back.

Note: Wood is not included in either kit. We're offering the wood and veneer for the trim separately, see below.

Both kits include the following hardware:

- (2) Brass Hinges, 1" x 1"
- (1) Bullet Catch with Screw
- (1) ½" Brass Knob
- (1) Full-Size Pattern of Front and Back Template and Trim

Quartz Movement

777-100 Tambour Clock Quartz Movement Kit $24.95

- All Hardware and Pattern Listed Above
- (1) Quartz Clock Movement (AA battery not included)
- (1 pr.) Black Serpentine Hands
- (1) 5⅛"-Dia. Brass and Glass Bezel with Roman Numeral Dial and Mounting Brads

Keywind Movement

777-150 Tambour Clock Keywind Movement Kit $119.95

- All Hardware and Pattern Listed Above
- (1) Keywind Clock Movement. Gongs on hour and half hour. Key included
- (1 pr.) Black Hands
- (1) 5⅛"-Dia. Brass and Glass Bezel with Roman Numeral Dial and Mounting Brads. Dial Pre-Punched for Movement
- Special Building and Mounting Instructions for Keywind Movement (Note: Don't start building the clock until you've read these instructions.)

WOOD. To make the Tambour Clock, you could glue veneer or flexible-backed veneer over the top and faces. One problem with using flexible-backed veneer is that the cloth or paper backing will be exposed on the front edges of the clock. Sources of veneer are listed in the Alternate Catalog Section below.

On pages 6 to 11 we described how to make the Tambour Clock from plywood and solid stock. We're offering the walnut plywood and also the solid walnut. (Note: Though the pieces of plywood will be fairly closely color-matched, the solid stock may be slightly darker since walnut plywood tends to be lighter in color than solid stock. If you want, you can stain them all the same.)

Note: You will also need ¼" Masonite for the template and case top. These are not included.

Walnut Plywood

777-200 Walnut Plywood for Tambour Clock $26.95

- (2 pcs.) ¾" x 7⅞" x 18", Walnut Plywood (To Make the Case Front and Back)
- (1 pc.) ¾" x 4½" x 25½", Walnut Plywood (To make Case Top and End veneer, see page 16 for more on making these.)

Walnut

777-225 Solid Walnut for Tambour Clock $12.95

- (1 pc.) ¾" x 5" x 19" for Base
- (1 pc.) ¾" x 7" x 5½" for Door
- (1 pc.) ½" x 3" x 8½" for Fillers
- (1 pc.) ¼" x 1 1/16" x 9" for Feet

Triangular-Shaped Trim

777-250 Clock Trim $5.95

- (1 pc.) 4" x 12" Walnut Paper-backed Burl Veneer
- (1 pc.) ⅛" x 4" x 12" Solid Walnut (Used as base for veneer, see page 11)

ROUTER BITS

We used a few special carbide-tipped router bits for the projects in this issue. They're available from **Woodsmith Project Supplies** or the catalogs below.

Rabbeting Bits

1514-400 ⅜" Rabbeting Bit, ¼" shank $24.95

1512-450 ⅜" Rabbeting Bit, ½" shank $26.95

Note: These bits come with a bearing to cut a ⅜"-wide rabbet only. To cut a ¼"-wide rabbet, also order the following bearing:

1501-455 ¼" Rabbeting Bearing, 3/16" Inside Diameter, ¾" Outside Diameter $5.95

Flush Trim Bits

1514-885 ½" Flush Trim Bit, 1" Cut, ¼" Shank $15.95

1512-887 ½" Flush Trim Bit, 1" Cut, ½" Shank $17.95

Pattern Bits

1514-160 ½" Pattern Bit (bearing on top), 1" Cutting Length, ¼" Shank $22.95

We recommend using the pattern bit above as an easy way to make duplicate shapes. But, we mentioned at the bottom of the opposite page that you can also make a pattern bit with a straight bit, bearing, and collar. So we're offering the bit and parts:

1514-643 ½" Straight Bit, 1" Cut, ¼" Shank $13.95

1501-206 Ball Bearing, ¼" In. Dia., ½" Out. Dia. $4.95

1501-308 Retaining Collar ¼" In. Dia., 7/16" Out. Dia. .. $2.95

Inlay Bit

1514-603 ⅛" Straight Bit, ¼" Shank, 7/16"-Deep Cut $10.95

GUIDE BUSHINGS

You'll need a ⅝" guide bushing to make the Curved-Front Table top from the template. You should be able to buy bushings for your router from the dealer who sold you the router.

A universal base plate with bushings to fit most popular round base routers is available from **Woodsmith Project Supplies** and the Sources below.

Universal Bushing Set

5503-106 Universal Router Guide Bushing Set $15.95

- (1) Plastic Base Plate That Fits Most Round Base Routers
- (4) Guide Bushings: 5/16", 7/16" Short, 7/16" Long, and ⅝" Dia.

ORDER INFORMATION

BY MAIL

To order by mail, use the form enclosed with a current issue. The order form includes information on handling and shipping charges, and sales tax. Send your mail order to:

Woodsmith Project Supplies
P.O. Box 10350
Des Moines, IA 50306

BY PHONE

For fastest service use our Toll Free order line. Open Monday through Friday, 8:00 AM to 5:00 PM Central Time.

Before calling, have your VISA, Master Card, or Discover Card ready.

1-800-444-7002

Note: Prices subject to change after December, 1991.

ALTERNATE CATALOG SOURCES

Similar hardware and supplies may be found in the following catalogs. Please call each company for a catalog or information.

Constantine's
800-223-8087
Veneer, Walnut, Clock Movements and Parts

Craftsman Wood Service
800-543-9367
Veneer, Plywood, Walnut, Clock Parts, Router Bits, Guide Bushing Set

Grizzly Imports, Inc.
800-541-5537
Router Bits

Leichtung Workshops
800-321-6840
Clock Movements, Router Bits, Guide Bushing Set

Klockit
800-556-2548
Clock Movements and Parts

Mason & Sullivan
800-933-3010
Clock Movements and Parts, Router Bits

Woodcraft
800-225-1153
Quartz Clock Movements, Router Bits, Guide Bushing Set

MLCS, Ltd.
800-533-9298
Router Bits

Shopsmith, Inc.
800-543-7586
Router Bits, Guide Bushing Set

Trend-Lines
800-767-9999
Router Bits, Guide Bushings

Meisel Hardware
800-441-9870
Quartz Clock Movements

The Woodworkers' Store
612-428-2199
Quartz Clock Movements, Veneer, Plywood, Walnut, Router Bits

Final Details

Curved-Front Table

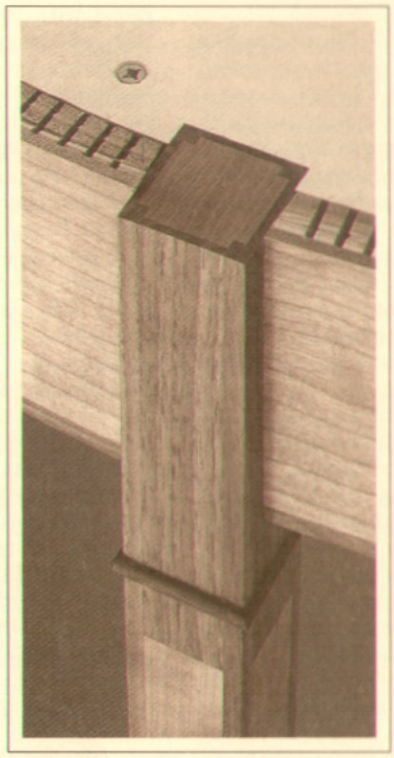

▲ *The apron on this Curved-Front Table is made by kerf bending cherry plywood. The tapered legs may look like they're made from solid walnut with cherry inlays. But we used a different technique that's actually easier. The core of each leg is cherry with walnut inlays in the top, bottom, and along the edges.*

Tambour Clock

▲ *A door in the back of the Tambour Clock allows access to the works. The case is sized for a quartz or keywind movement with gong (shown here).*

Flush Trimming

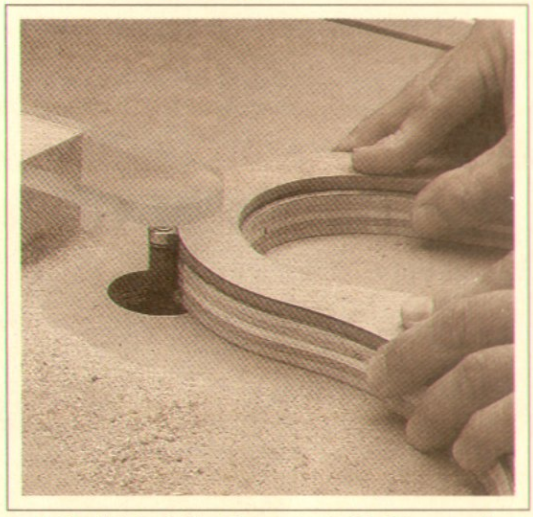

▲ *A flush trim bit in the router table lets you shape a workpiece to match a template. Shown here is the curved back piece for the Tambour Clock.*